Jumper; 7-way; insulated; red

www.wago.com/2002-407/000-005

Picture differs from the item.

Color:

Data

Electrical data

Ratings per IEC/EN

Nominal voltage (III/3)	800 V
Rated current	25 A

Ex information

Rated current (Ex e II)	20 A

Physical data

Width	34.7 mm / 1.366 inches

Subject to changes. Please also observe the further product documentation!

WAGO GmbH & Co. KG
Hansastr. 27
32423 Minden
Phone: +49571 887-0 | Fax: +49571 887-169
Email: info.de@wago.com | Web: www.wago.com

Do you have any questions about our products?
We are always happy to take your call at +49 (571) 887-44222.

Height	4.1 mm / 0.161 inches
Depth	19 mm / 0.748 inches
Jumper assignment	1-2-3-4-5-6-7

Material data

Note (material data)	Information on material specifications can be found here
Color	red
Fire load	0.025 MJ
Weight	3.4 g

Commercial data

eCl@ss 10.0	27-14-11-40
eCl@ss 9.0	27-14-11-40
ETIM 8.0	EC000489
ETIM 7.0	EC000489
ECCN	NO DATA
PU (SPU)	25 pcs
Packaging type	bag
Country of origin	DE
GTIN	4050821076049
Customs tariff number	85366990990

Environmental Product Compliance

RoHS Compliance Status	Compliant,No Exemption

Approvals / Certificates

Declarations of conformity and manufacturer's declarations

Logo	Approval	Additional Approval Text	Certificate name
	Railway WAGO GmbH & Co. KG	-	Railway Ready

Subject to changes. Please also observe the further product documentation!

WAGO GmbH & Co. KG
Hansastr. 27
32423 Minden
Phone: +49571 887-0 | Fax: +49571 887-169
Email: info.de@wago.com | Web: www.wago.com

Do you have any questions about our products?
We are always happy to take your call at +49 (571) 887-44222.

Downloads

Documentation

Bid Text

2002-407/000-005 X81 - Datei	2019 年2月19 日	xml 2.6 kB	Download
2002-407/000-005 doc - Datei	2017 年4月27 日	doc 24.6 kB	Download

Additional Information

Technical Section Technical explanations	pdf 2.3 MB	Download

CAD/CAE-Data

CAE data

EPLAN Data Portal 2002-407/000-005	URL	Download
WSCAD Universe 2002-407/000-005	URL	Download
ZUKEN Portal 2002-407/000-005	URL	Download
WSCAD Universe 2002-407/000-005	URL	Download
EPLAN Data Portal 2002-407/000-005	URL	Download

CAD data

2D/3D Models 2002-407/000-005	URL	Download

Asset Administration Shell

Asset Administration Shell 2002-407/000-005	URL	Download

Environmental Product Compliance

Compliance Search

Environmental Product Compliance 2002-407/000-005
Subject to changes. Please also observe the further product documentation!

WAGO GmbH & Co. KG
Hansastr. 27
32423 Minden
Phone: +49571 887-0 | Fax: +49571 887-169
Email: info.de@wago.com | Web: www.wago.com

Do you have any questions about our products?
We are always happy to take your call at +49 (571) 887-44222.

Jumper; 7-way; insulated; red

Installation Notes

Commoning

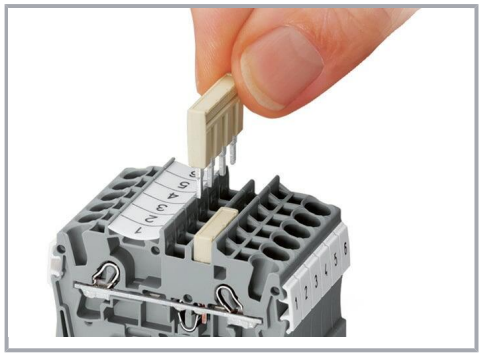

Insert push-in type jumper bar and push down until it hits backstop.

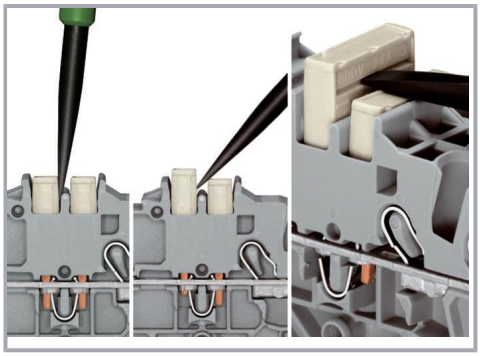

Removing a push-in type jumper bar:
Insert the operating tool between the jumper and partition wall of the dual jumper slots, then lift up the jumper.
Place the operating tool in the center of jumpers for up to five contacts (see above), or alternately on both sides for jumpers with more than five contacts.

Commoning

Custom jumpers are created by breaking and removing jumper contacts (2000, 2001, 2002, 2004 Series).

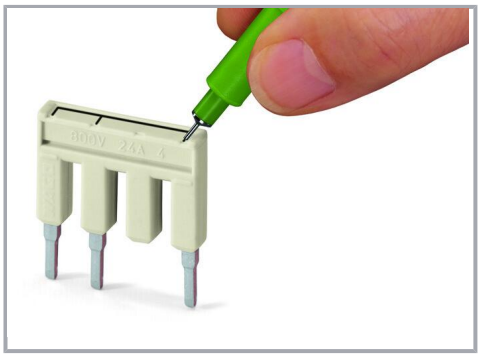

Marking with a felt-tip pen.

Commoning

WAGO GmbH & Co. KG
Hansastr. 27
32423 Minden
Phone: +49571 887-0 | Fax: +49571 887-169
Email: info.de@wago.com | Web: www.wago.com

Do you have any questions about our products?
We are always happy to take your call at +49 (571) 887-44222.

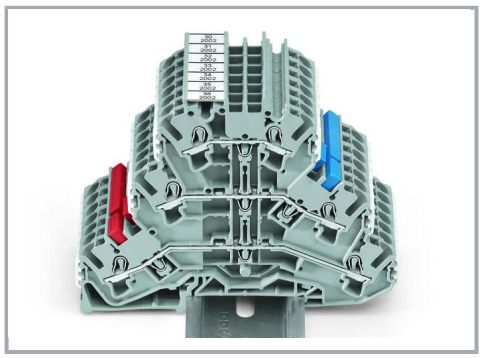

For example, colored push-in type jumper bars are used with sensor terminal blocks.

Commoning

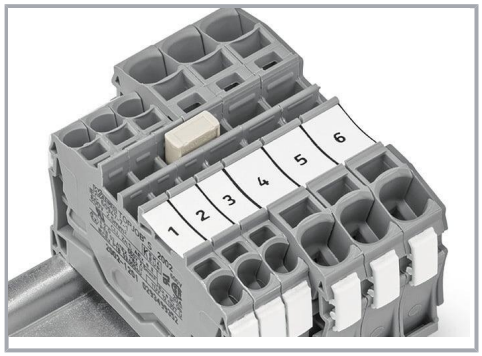

Stepping down via push-in type jumper bar.

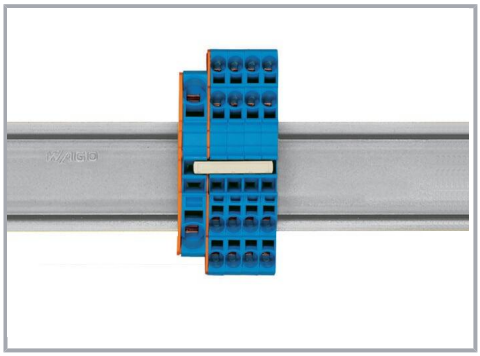

Stepping down via push-in type jumper bar: Commoning via closed terminal side with end plate allows jumpering over two cross-section sizes, e.g., from 16 mm² (6 AWG) to 6 mm² (10 AWG) or from 6 mm² (10 AWG) to 2.5 mm² (14 AWG) (see illustration above).

Subject to changes. Please also observe the further product documentation!

WAGO GmbH & Co. KG
Hansastr. 27
32423 Minden
Phone: +49571 887-0 | Fax: +49571 887-169
Email: info.de@wago.com | Web: www.wago.com

Do you have any questions about our products?
We are always happy to take your call at +49 (571) 887-44222.

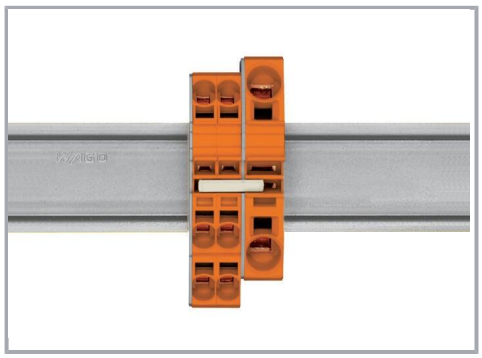

Stepping down via push-in type jumper bar:
Commoning via open terminal side with end plate allows jumpering over two cross-section sizes for 16 mm² (6 AWG) and 10 mm² (8 AWG) and one cross-section size for 6/4/2.5 mm² (10 /12/14 AWG). An example: from 16 mm² (6 AWG) to 6 mm² (10 AWG) (see illustration above) or from 10 mm² (8 AWG) to 4 mm² (12 AWG).

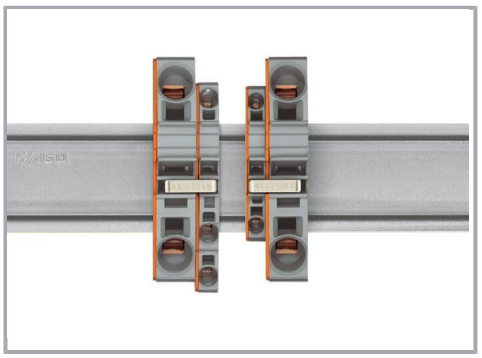

Note:
The total current of the outgoing circuits must not exceed the nominal current of the step-down jumper/push-in type jumper bar.

Product family

TOPJOB® S

TOPJOB® S: In various industrial applications and modern building installations, WAGO's wide and versatile range of rail-mount terminal blocks provides more than just reliable electrical connections.

Show all products from the family

Subject to changes. Please also observe the further product documentation!

WAGO GmbH & Co. KG
Hansastr. 27
32423 Minden
Phone: +49571 887-0 | Fax: +49571 887-169
Email: info.de@wago.com | Web: www.wago.com

Do you have any questions about our products?
We are always happy to take your call at +49 (571) 887-44222.