Data sheet




# DFS20A-A4A1F018000

## DFS2x

INCREMENTAL ENCODERS

SICK
Sensor Intelligence.



Illustration may differ

## Ordering information

| Type | part no. |
|---|---|
| DFS20A-A4A1F018000 | 1077689 |

Other models and accessories ➜ www.sick.com/DFS2x

## Detailed technical data

### Safety-related parameters

| | |
|---|---|
| **$MTTF_D$ (mean time to dangerous failure)** | 330 years (EN ISO 13849-1) [1] |

[1] This product is a standard product and does not constitute a safety component as defined in the Machinery Directive. Calculation based on nominal load of components, average ambient temperature 40 °C, frequency of use 8760 h/a. All electronic failures are considered hazardous. For more information, see document no. 8015532.

### Performance

| | |
|---|---|
| **Pulses per revolution** | 18,000 |
| **Measuring step** | ± 90°, electric/pulses per revolution |
| **Measuring step deviation** | ± 0.002° pulses > 10,000 |
| **Error limits** | ± 0.03° |

### Interfaces

| | |
|---|---|
| **Communication interface** | Incremental |
| **Communication Interface detail** | TTL / RS-422 |
| **Number of signal channels** | 6-channel |
| **Initialization time** | 40 ms [1] |
| **Output frequency** | 820 kHz |
| **Load current** | 30 mA |
| **Operating current** | 50 mA (without load) |

[1] Valid positional data can be read once this time has elapsed.

### Electronics

| | |
|---|---|
| **Connection type** | Male connector, MS, 6-pin, radial [1] |
| **Supply voltage** | 4.5 ... 5.5 V |
| **Reference signal, number** | 1 |
| **Reference signal, position** | 180°, electric, gated with A |

[1] The Zero-Set function is not available with 6-pin MS connector or M12 connector options.
[2] Short-circuit opposite to another channel or GND permissable for maximum 30 s.

| | |
|---|---|
| **Reverse polarity protection** | ✓ |
| **Short-circuit protection of the outputs** | ✓ [2] |

[1] The Zero-Set function is not available with 6-pin MS connector or M12 connector options.
[2] Short-circuit opposite to another channel or GND permissable for maximum 30 s.

## Mechanics

| | |
|---|---|
| **Mechanical design** | Solid shaft, Square flange |
| **Shaft diameter** | 10 mmWith flat |
| **Shaft length** | 16 mm |
| **Weight** | + 0.4 kg [1] |
| **Shaft material** | Stainless steel 1,4305 |
| **Flange material** | Aluminum |
| **Housing material** | Aluminum |
| **Start up torque** | 0.5 Ncm (+20 °C) |
| **Operating torque** | 0.3 Ncm (+20 °C) |
| **Permissible shaft loading** | 80 N (radial)<br>40 N (axial) |
| **Operating speed** | ≤ 9,000 $min^{-1}$ |
| **Moment of inertia of the rotor** | 15 $gcm^2$ |
| **Bearing lifetime** | 3.6 x $10^9$ revolutions |
| **Angular acceleration** | ≤ 500,000 $rad/s^2$ |

[1] Based on encoder with MS male connector.

## Ambient data

| | |
|---|---|
| **EMC** | According to EN 61000-6-2 and EN 61000-6-3 |
| **Enclosure rating** | IP65, shaft side (IEC 60529)<br>IP67, housing side (IEC 60529) |
| **Permissible relative humidity** | 90 % (Condensation not permitted) |
| **Operating temperature range** | –30 °C ... +85 °C |
| **Storage temperature range** | –40 °C ... +100 °C, without package |
| **Resistance to shocks** | 100 g, 11 ms (EN 60068-2-27) |
| **Resistance to vibration** | 30 g, 10 Hz ... 2,000 Hz (EN 60068-2-6) |

## Certificates

| | |
|---|---|
| **EU declaration of conformity** | ✓ |
| **UK declaration of conformity** | ✓ |
| **ACMA declaration of conformity** | ✓ |
| **China-RoHS** | ✓ |
| **Information according to Art. 3 of Data Act (Regulation EU 2023/2854)** | ✓ |

## Classifications

| | |
|---|---|
| **ECLASS 5.0** | 27270501 |
| **ECLASS 5.1.4** | 27270501 |
| **ECLASS 6.0** | 27270590 |

| | |
|---|---|
| **ECLASS 6.2** | 27270590 |
| **ECLASS 7.0** | 27270501 |
| **ECLASS 8.0** | 27270501 |
| **ECLASS 8.1** | 27270501 |
| **ECLASS 9.0** | 27270501 |
| **ECLASS 10.0** | 27270501 |
| **ECLASS 11.0** | 27270501 |
| **ECLASS 12.0** | 27270501 |
| **ETIM 5.0** | EC001486 |
| **ETIM 6.0** | EC001486 |
| **ETIM 7.0** | EC001486 |
| **ETIM 8.0** | EC001486 |
| **UNSPSC 16.0901** | 41112113 |

## Dimensional drawing DFS20 square flange mount, radial connector outlet M12 and MS, cable outlet

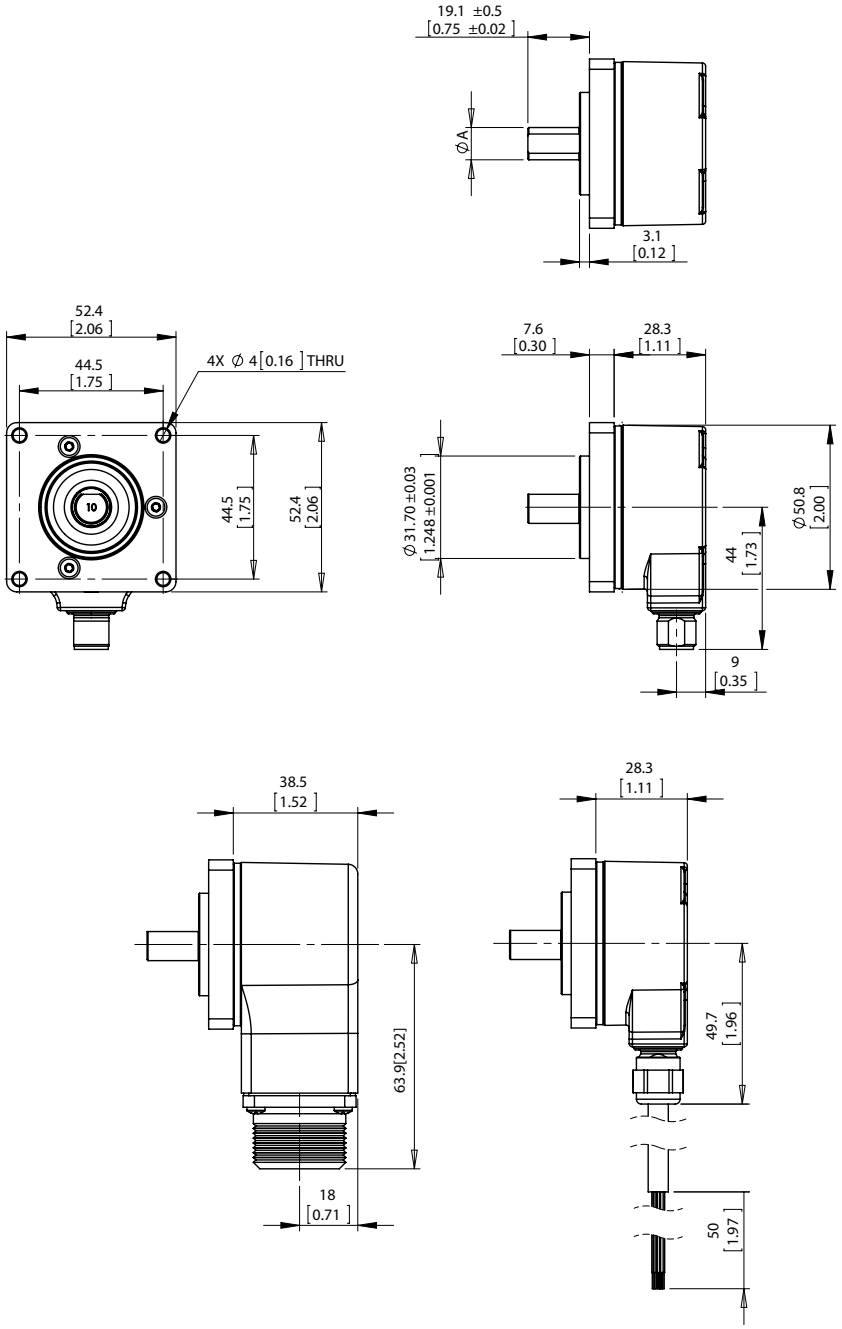


Dimensions in mm (inch)

| Type | Shaft diameterA |
|---|---|
| DFS2x-x1xxxxxxx | 1/4″ |
| DFS2x-x2xxxxxxxDFS2x-xCxxxxxxx | 3/8″ |
| DFS2x-xFxxxxxxx | 1/2″ |
| DFS2x-x3xxxxxxx | 6 mm |
| DFS2x-x4xxxxxxx | 10 mm |

## PIN assignment View of MS male device connector on encoder

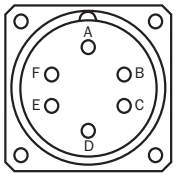


| M12, 8-pin | MS, 10-pin | MS, 7-pin | MS, 6-pin | Cable, 9-wire | Signal | Description |
|---|---|---|---|---|---|---|
| 1 | H | - | - | Brown | $\overline{A}$ | Signal wire |
| 2 | A | A | E | White | A | Signal wire |
| 3 | I | - | - | Black | $\overline{B}$ | Signal wire |
| 4 | B | B | D | Pink | B | Signal wire |
| 5 | J | - | - | Yellow | $\overline{Z}$ | Signal wire |
| 6 | C | C | C | Purple | Z | Signal wire |
| 7 | F | F | A | Blue | GND | GND |
| 8 | D | D | B | Red | Us | Supply voltage |
| - | E | E | - | Orange | 0-SET | Input signal |
| - | G | G | F | - | Housing | Electrically connected to the housing potential |
| - | - | - | - | Blank | Drain wire | Bare wire parallel to the braided screen |
| - | - | - | - | Screen | Screen | Screen connected to housing on encoder side |

Diagrams Signal Outputs with Counter Clock-wise Counting Direction Option Selected (B leads A for clock-wise rotation). Complement signals AN, BN and ZN are not shown.

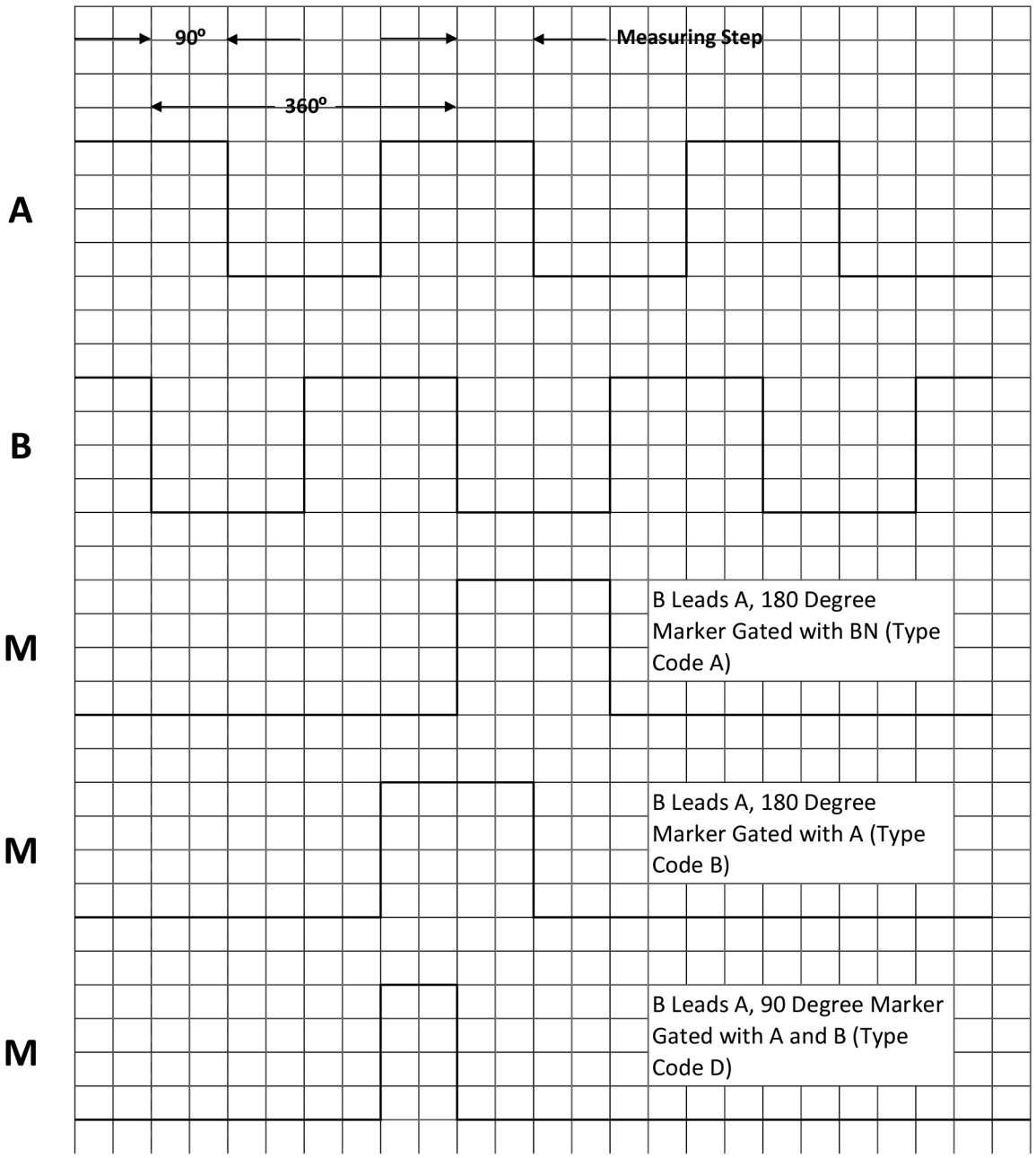


Cw with view on the encoder shaft in direction "A", compare dimensional drawing.

Diagrams Signal Outputs with Clock-wise Counting Direction Option Selected (A leads B for clock-wise rotation). Complement signals AN, BN and ZN are not shown.

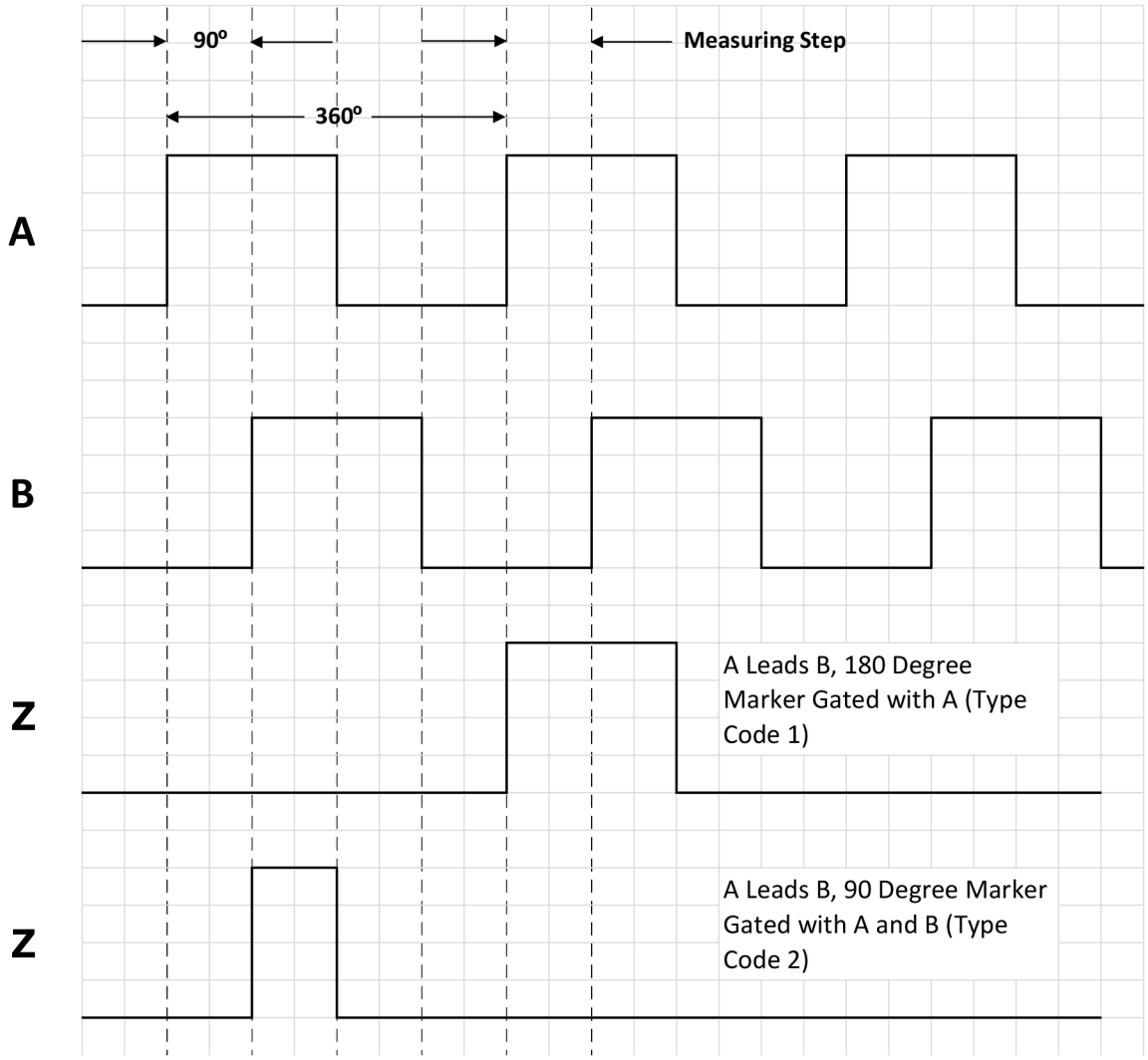


Cw with view on the encoder shaft in direction "A", compare dimensional drawing.

## maximum revolution range

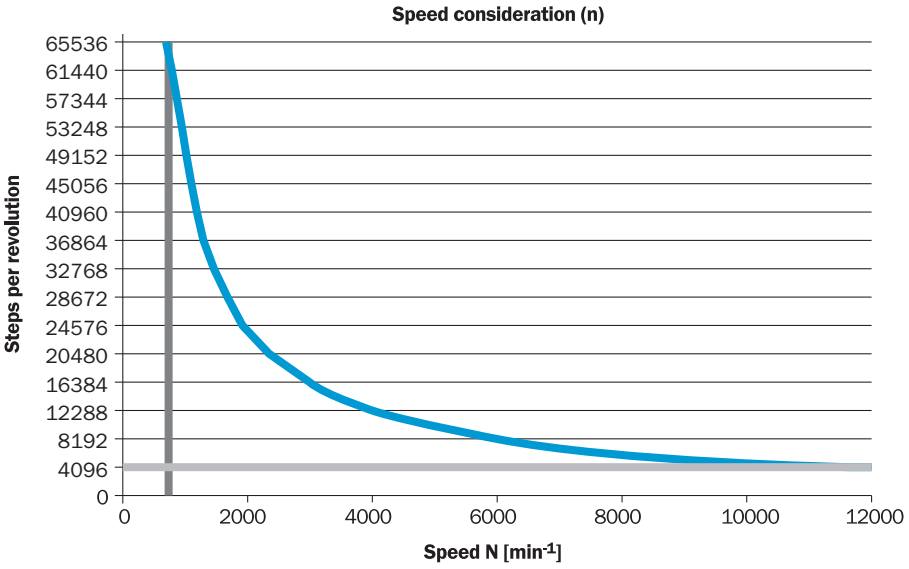


## Recommended accessories

Other models and accessories ➜ www.sick.com/DFS2x

| | Brief description | Type | part no. |
|---|---|---|---|
| connectors and cables | | | |
| | • **Connection type head A:** Female connector, MS/06, 6-pin, straight<br>• **Connection type head B:** Flying leads<br>• **Cable:** 3 m, 11-wire<br>• **Description:** Shielded | DOL-MS06-G03MMA2 | 7102138 |
| | • **Connection type head A:** Female connector, MS/06, 6-pin, straight<br>• **Connection type head B:** Flying leads<br>• **Cable:** 5 m, 11-wire<br>• **Description:** Shielded | DOL-MS06-G05MMA2 | 7102139 |
| | • **Connection type head A:** Female connector, MS/06, 6-pin, straight<br>• **Connection type head B:** Flying leads<br>• **Cable:** 1.5 m, 11-wire<br>• **Description:** Shielded | DOL-MS06-G1M5MA2 | 7102137 |
| | • **Connection type head A:** Female connector, MS/06, 6-pin, straight<br>• **Connection type head B:** Flying leads<br>• **Cable:** 10 m, 11-wire<br>• **Description:** Shielded | DOL-MS06-G10MMA2 | 7102140 |
| | • **Connection type head A:** Female connector, MS/06, 6-pin, straight<br>• **Connection type head B:** Flying leads<br>• **Cable:** 20 m, 11-wire<br>• **Description:** Shielded | DOL-MS06-G20MMA2 | 7102141 |
| | • **Connection type head A:** Female connector, MS/06, 6-pin, straight<br>• **Connection type head B:** Flying leads<br>• **Cable:** 30 m, 11-wire<br>• **Description:** Shielded | DOL-MS06-G30MMA2 | 7102142 |
| | • **Connection type head A:** Female connector, MS/06, 6-pin, straight, A-coded<br>• **Description:** Unshielded | DOS-MS06-G | 7102136 |

# SICK AT A GLANCE

SICK is one of the leading manufacturers of intelligent sensors and sensor solutions for industrial applications. A unique range of products and services creates the perfect basis for controlling processes securely and efficiently, protecting individuals from accidents and preventing damage to the environment.

We have extensive experience in a wide range of industries and understand their processes and requirements. With intelligent sensors, we can deliver exactly what our customers need. In application centers in Europe, Asia and North America, system solutions are tested and optimized in accordance with customer specifications. All this makes us a reliable supplier and development partner.

Comprehensive services complete our offering: SICK LifeTime Services provide support throughout the machine life cycle and ensure safety and productivity.

**For us, that is “Sensor Intelligence.”**

# WORLDWIDE PRESENCE:

Contacts and other locations –www.sick.com