

Inductive sensor

NBN3-F31-U8-K

- Direct mounting on standard actuators
- Compact and stable housing
- Fixed setting

Dimensions

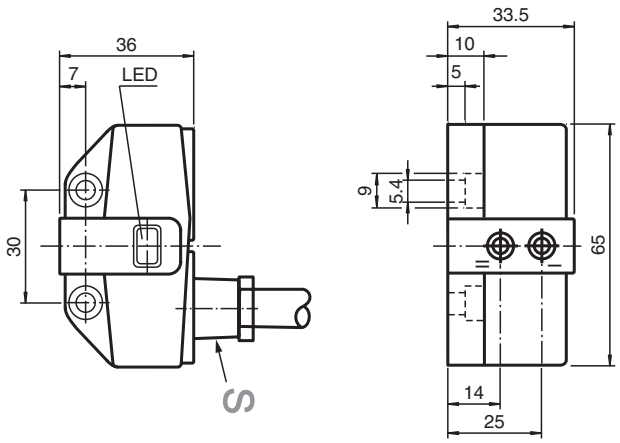

Technical Data

General specifications		
Switching function		2 x normally open (NO)
Rated operating distance	s_n	3 mm
Installation		flush mountable
Output polarity		AC/DC
Assured operating distance	s_a	0 ... 2.43 mm
Reduction factor r_{Al}		0.45
Reduction factor r_{Cu}		0.38
Reduction factor r_{304}		1
Reduction factor r_{St37}		1.04
Output type		4-wire
Nominal ratings		
Operating voltage	U_B	20 ... 253 V AC/DC
Switching frequency	f	25 Hz
Hysteresis	H	typ. 3 %
Reverse polarity protection		yes
Short-circuit protection		yes

Release date: 2025-07-07 Date of issue: 2025-07-07 Filename: 188325_eng.pdf

Technical Data

Voltage drop	U_d	≤ 8 V
Operating current	I_L	4 ... 400 mA
Off-state current	I_r	≤ 1.7 mA
Operating voltage indicator		LED, green
Switching state indicator		LED, yellow
Functional safety related parameters		
$MTTF_d$		529 a
Mission Time (T_M)		20 a
Diagnostic Coverage (DC)		0 %
Compliance with standards and directives		
Standard conformity		
Standards		EN IEC 60947-5-2
Approvals and certificates		
Protection class		II
Rated insulation voltage	U_i	253 V
Rated impulse withstand voltage	U_{imp}	4 kV
UL approval		cULus Listed Load Type: General Purpose Enclosure Type Rating: Type 1
CSA approval		cCSAus Listed, General Purpose
Ambient conditions		
Ambient temperature		-25 ... 70 °C (-13 ... 158 °F)
Mechanical specifications		
Connection type		cable
Housing material		PBT
Sensing face		PBT
Degree of protection		IP67
Cable		
Wire end ferrules		yes
Cable diameter		5.2 mm ± 0.2 mm
Bending radius		> 10 x cable diameter
Material		PVC
Color		grey
Number of cores		4
Core cross section		0.5 mm^2
Length	L	5 m
Tightening torque, fastening screws		≤ 5 Nm
Dimensions		
Height		33.5 mm
Width		65 mm
Length		36 mm

Connection

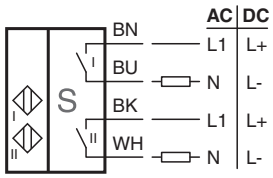

Release date: 2025-07-07 Date of issue: 2025-07-07 Filename: 188325_eng.pdf