Pushing Performance
Since 1945

har-modular M1 module male str. w.guide



Image is for illustration purposes only. Please refer to product description.

Part number	02 53 901 0401
Specification	har-modular M1 module male str. w.guide
HARTING eCatalogue	https://b2b.harting.com/02539010401

Identification

Category	Connectors
Series	har-modular®
Identification	M1 module
Element	Male connector
Description of the contact	Straight

Version

Width of the module	10.16 mm
Connection type	Mezzanine
Number of contacts	1
Details	Please order contacts separately.

Technical characteristics

Clearance distance	4 mm in the module 2 mm to module edge
Creepage distance	4 mm in the module 2 mm to module edge
Insulation resistance	$>10^{11}$ Ω
Limiting temperature	-55 ... +125 °C
Insertion and withdrawal force	≤10 N
Mating cycles	≥500
Test voltage $U_{r.m.s.}$	1.55 kV
Isolation group	I (600 ≤ CTI)

HARTING Electronics GmbH | Marienwerderstraße 3 | 32339 Espelkamp | Germany
Phone +49 5772 47-97200 | electronics@HARTING.com | www.HARTING.com

Pushing Performance
Since 1945

Technical characteristics

Hot plugging	No
Moisture Sensitivity Level (MSL)	1 acc. to ECA/IPC/JEDEC J-STD-020D

Material properties

Material	Polyamide (PA)
Colour	Black
Material flammability class acc. to UL 94	V-0
RoHS	compliant
ELV status	compliant
China RoHS	e
REACH Annex XVII substances	Not contained
REACH ANNEX XIV substances	Not contained
REACH SVHC substances	Not contained
California Proposition 65 substances	Not contained
Fire protection on railway vehicles	EN 45545-2 (2020-08)
Requirement set with Hazard Levels	R22 (HL 1-3) R23 (HL 1-3)

Specifications and approvals

UL / CSA	UL 1977 ECBT2.E102079 CSA-C22.2 No. 182.3 ECBT8.E102079
Railway classification	F1/I2 acc. to NFF 16-101/102

Commercial data

Packaging size	20
Net weight	0.9 g
Country of origin	Romania
European customs tariff number	85366990
GTIN	5713140197732
ETIM	EC002637
eCl@ss	27460201 PCB connector (board connector)

HARTING Electronics GmbH | Marienwerderstraße 3 | 32339 Espelkamp | Germany
Phone +49 5772 47-97200 | electronics@HARTING.com | www.HARTING.com

Pushing Performance
Since 1945

Mating conditions

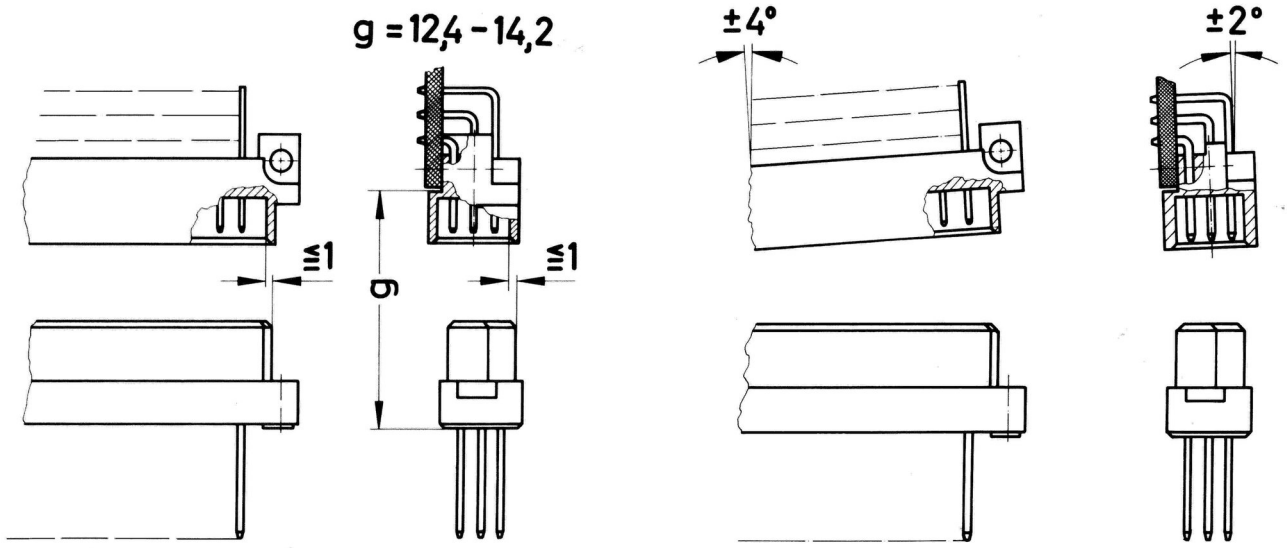

To ensure reliable connections and prevent unnecessary damage, please refer to the application data diagrams. These recommendations are set out in IEC 60603-2.
The connectors should not be coupled and decoupled under electrical load.

HARTING Electronics GmbH | Marienwerderstraße 3 | 32339 Espelkamp | Germany
Phone +49 5772 47-97200 | electronics@HARTING.com | www.HARTING.com