Data sheet | Item number: 277-123

Male connector; 3-pole; 1,00 mm²; white/gray

www.wago.com/277-123

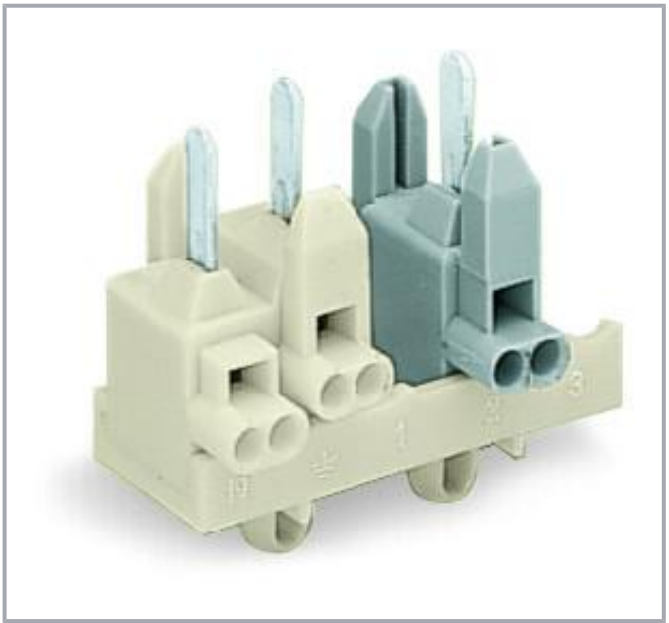

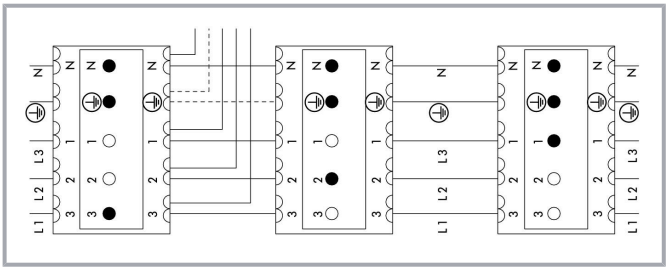

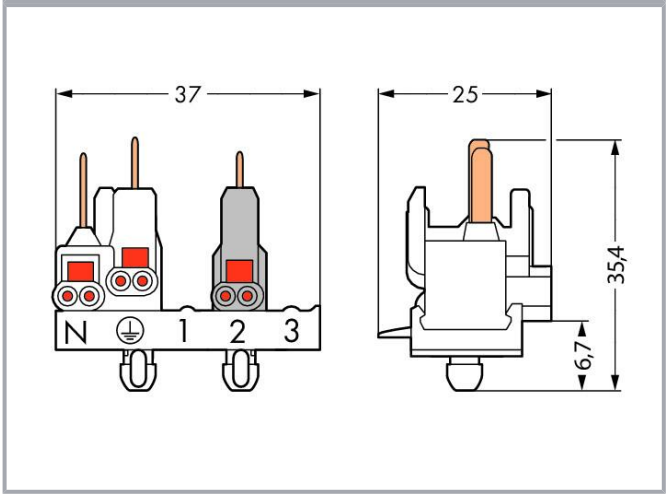

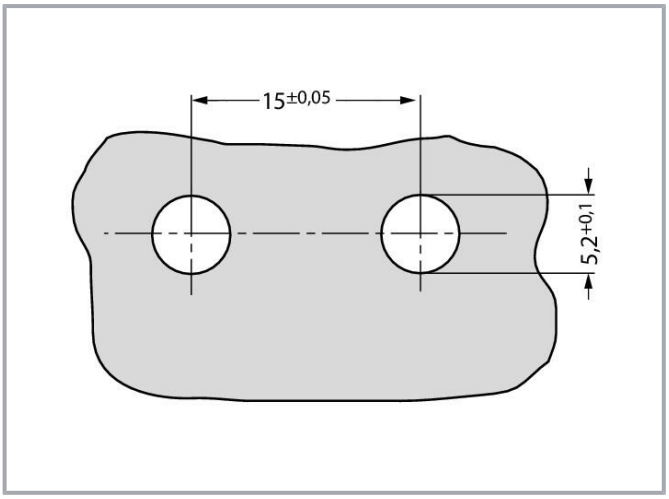

Item description

- Flexible connection system with PUSH WIRE® connection
- Phase selection

Subject to changes. Please also observe the further product documentation!

WAGO GmbH & Co. KG
Hansastr. 27
32423 Minden
Phone: +49571 887-0 | Fax: +49571 887-169
Email: info.de@wago.com | Web: www.wago.com

Do you have any questions about our products?
We are always happy to take your call at +49 (571) 887-44222.

Data
Electrical data

Ratings per IEC/EN

Ratings per	IEC/EN 60664-1
Rated voltage (III/2)	400 V
Rated impulse voltage (III/2)	4 kV
Rated current	10 A
Legend (ratings)	(III / 2) ≙ Overvoltage category III / Pollution degree 2

Connection data

Number of connection types	1

Connection 1

Connection technology	PUSH WIRE®
Solid conductor	0.5 … 1 mm² / 20 … 18 AWG
Strip length	10 … 11 mm / 0.39 … 0.43 inches
Pole number	3

Physical data

Width	25 mm / 0.984 inches
Height	35.4 mm / 1.394 inches
Depth	37 mm / 1.457 inches

Material data

Note (material data)	Information on material specifications can be found here
Color	white/gray
Material group	I
Insulation material	Polyamide (PA66)
Flammability class per UL94	V2
Clamping spring material	Chrome-nickel spring steel (CrNi)
Contact material	Electrolytic copper (E_{Cu})
Contact plating	Tin
Fire load	0.139 MJ

Subject to changes. Please also observe the further product documentation!

WAGO GmbH & Co. KG
Hansastr. 27
32423 Minden
Phone: +49571 887-0 | Fax: +49571 887-169
Email: info.de@wago.com | Web: www.wago.com

Do you have any questions about our products?
We are always happy to take your call at +49 (571) 887-44222.

Weight	8.1 g

Environmental requirements

Temperature stability	105 °C

Commercial data

eCl@ss 10.0	27-44-03-14
eCl@ss 9.0	27-44-03-14
ETIM 8.0	EC000458
ETIM 7.0	EC000458
ECCN	NO DATA
PU (SPU)	500 pcs
Packaging type	bag
Country of origin	DE
GTIN	4044918507370
Customs tariff number	85366990990

Environmental Product Compliance

RoHS Compliance Status	Compliant,No Exemption

Approvals / Certificates

General approvals

Logo	Approval	Additional Approval Text	Certificate name
	CSA DEKRA Certification B.V.	C22.2	70048855
	UL UL International Germany GmbH	UL 1977	E45171
	UR Underwriters Laboratories Inc.	UL 1059	E45172
	VDE VDE Prüf- und Zertifizierungsinstitut	EN 61984	40029569

Subject to changes. Please also observe the further product documentation!

WAGO GmbH & Co. KG
Hansastr. 27
32423 Minden
Phone: +49571 887-0 | Fax: +49571 887-169
Email: info.de@wago.com | Web: www.wago.com

Do you have any questions about our products?
We are always happy to take your call at +49 (571) 887-44222.

Downloads

Documentation

Additional Information

Technical Section Technical explanations	2019 年4月3日	pdf 2.1 MB	Download

CAD/CAE-Data

CAE data

EPLAN Data Portal 277-123	URL	Download
WSCAD Universe 277-123	URL	Download
ZUKEN Portal 277-123	URL	Download

CAD data

2D/3D Models 277-123	URL	Download

Asset Administration Shell

Asset Administration Shell 277-123	URL	Download

Environmental Product Compliance

Compliance Search

Environmental Product Compliance 277-123 Male connector; 3-pole; 1,00 mm²; white/gray	URL	Download

Installation Notes

Subject to changes. Please also observe the further product documentation!

WAGO GmbH & Co. KG
Hansastr. 27
32423 Minden
Phone: +49571 887-0 | Fax: +49571 887-169
Email: info.de@wago.com | Web: www.wago.com

Do you have any questions about our products?
We are always happy to take your call at +49 (571) 887-44222.