PLC-2RSC-24DC/ 1 - Relay module

2987309

https://www.phoenixcontact.com/us/products/2987309

Please be informed that the data shown in this PDF document is generated from our online catalog. Please find the complete data in the user documentation. Our general terms of use for downloads are valid.

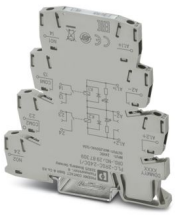

PLC-INTERFACE with two independent relays, consisting of PLC-BSC.../21 basic terminal block with screw connection and two integrated relays, power contact, for mounting on DIN rail NS 35/7,5, 2 x 1 N/O contact, input voltage 24 V DC

Your advantages

- Two switching channels in one 6.2 mm housing
- 100% higher channel density than conventional 6.2 mm relays
- Integrated input circuit/protective circuit
- Safe isolation according to DIN EN 50178 between coil and contacts and between contacts
- Screw- and Push-in connection

Commercial data

Item number	2987309
Packing unit	10 pc
Minimum order quantity	10 pc
Sales key	C461
Product key	DK6228
GTIN	4046356451215
Weight per piece (including packing)	37.4 g
Weight per piece (excluding packing)	34 g
Customs tariff number	85364190
Country of origin	DE

Technical data

Product properties

Product type	Relay Module
Product family	PLC-INTERFACE
Application	two integrated relays
Operating mode	100% operating factor
Mechanical service life	2x 10^7 cycles

Insulation characteristics: Air clearances and creepage distances between the power circuits

Insulation	Basic insulation
Overvoltage category	III
Pollution degree	2

Data management status

Date of last data management	26.08.2025

Electrical properties

Maximum power dissipation for nominal condition	0.17 W
Test voltage (Winding/contact)	3 kV AC (50 Hz, 1 min., winding/contact)
Test voltage (Contact/contact)	3 kV AC (50 Hz, 1 min., contact/contact)

Air clearances and creepage distances between the power circuits

Rated insulation voltage	250 V AC
Rated surge voltage	4 kV

Input data

Coil side

Nominal input voltage U_N	24 V DC
Input voltage range	18 V DC ... 33.6 V DC (20 °C)
Drive and function	monostable
Drive (polarity)	polarized
Typical input current at U_N	7 mA
Typical response time	4 ms
Typical release time	6 ms
Protective circuit	Reverse polarity protection; Polarity protection diode
	Freewheeling diode; Freewheeling diode
Operating voltage display	Yellow LED

Output data

Switching

Contact switching type	2 N/O contacts
Type of switch contact	Single contact
Note regarding the switch contact	two integrated relays

Contact material	AgNi
Maximum switching voltage	250 V AC
	30 V DC
Minimum switching voltage	24 V AC/DC
Limiting continuous current	3.5 A
Maximum inrush current	5 A
Min. switching current	5 mA
Interrupting rating (ohmic load) max.	84 W (at 24 V DC)
	24 W (at 48 V DC)
	24 W (at 60 V DC)
	31 W (at 110 V DC)
	46 W (at 220 V DC)
	875 VA (for 250 V AC)

Connection data

Connection method	Screw connection
Stripping length	8 mm
Screw thread	M3
Conductor cross-section rigid	0.14 mm² ... 2.5 mm²
Conductor cross-section flexible	0.14 mm² ... 2.5 mm²
	0.2 mm² ... 2.5 mm² (Single ferrule)
	2x 0.5 mm² ... 1.5 mm² (TWIN ferrule)
Conductor cross-section AWG	26 ... 14
Tightening torque	0.45 Nm ... 0.55 Nm (Usually these terminal blocks must be supported during conductor connection (held by one hand, supported on the housing))

Dimensions

Width	6.2 mm
Height	80 mm
Depth	94 mm

Material specifications

Color	gray (RAL 7042)
Flammability rating according to UL 94 (Housing)	V0 (Housing)

Environmental and real-life conditions

Ambient conditions

Degree of protection (Relay base)	IP20 (Relay base)
Ambient temperature (operation)	-20 °C ... 60 °C
Ambient temperature (storage/transport)	-20 °C ... 60 °C

Approvals

CE

Certificate	CE-compliant

Corrosive gas test

Identification	ISA-S71.04. G3 Harsh Group
	EN 60068-2-60

EMC data

Electromagnetic compatibility	Conformance with EMC directive
Low Voltage Directive	Conformance with Low Voltage Directive

Standards and regulations

Air clearances and creepage distances between the power circuits

Standards/regulations	IEC 60664
	EN 50178

Mounting

Mounting type	DIN rail mounting
Assembly note	in rows with zero spacing
Mounting position	any

Drawings

Application drawing

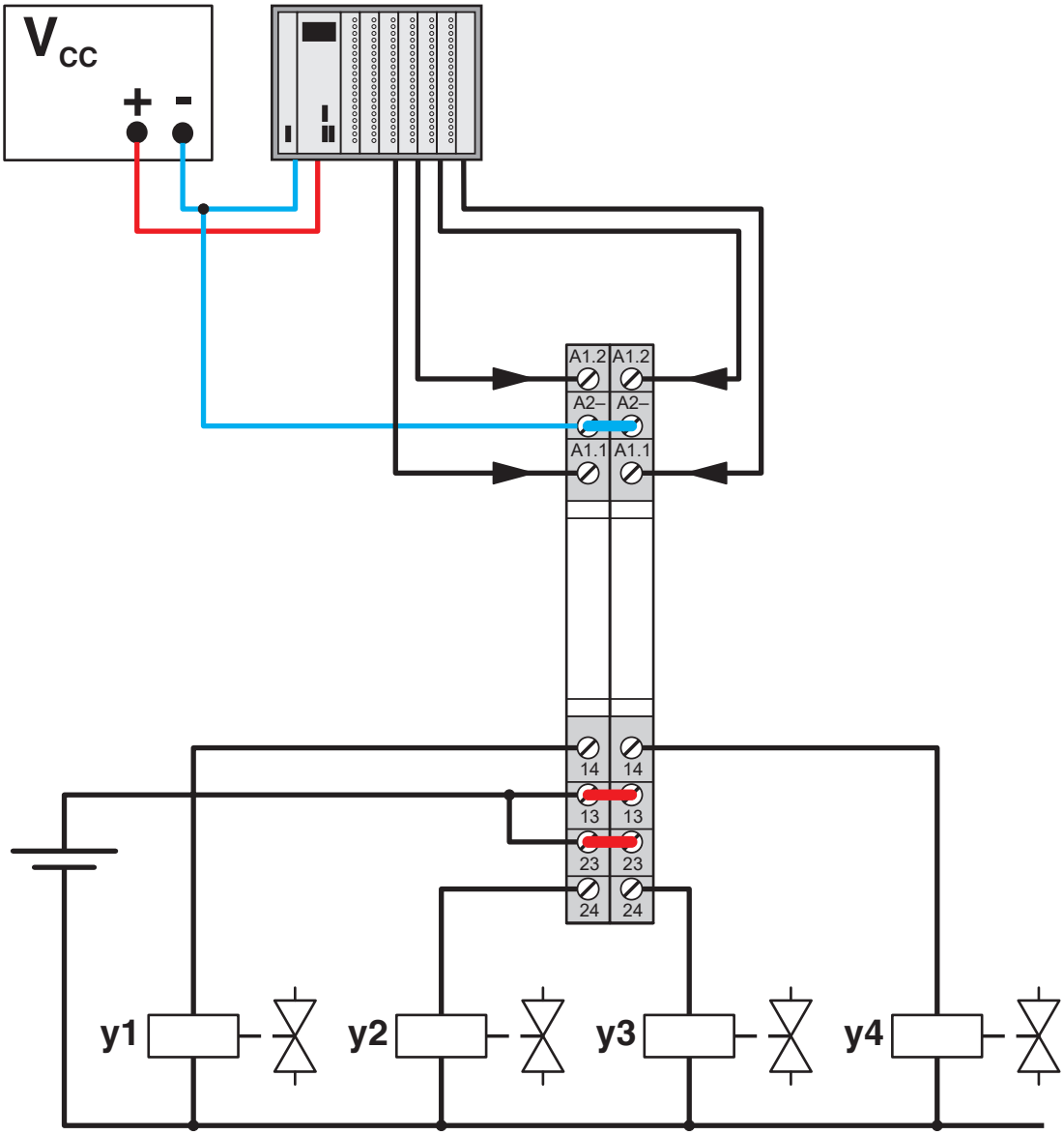

Diagram

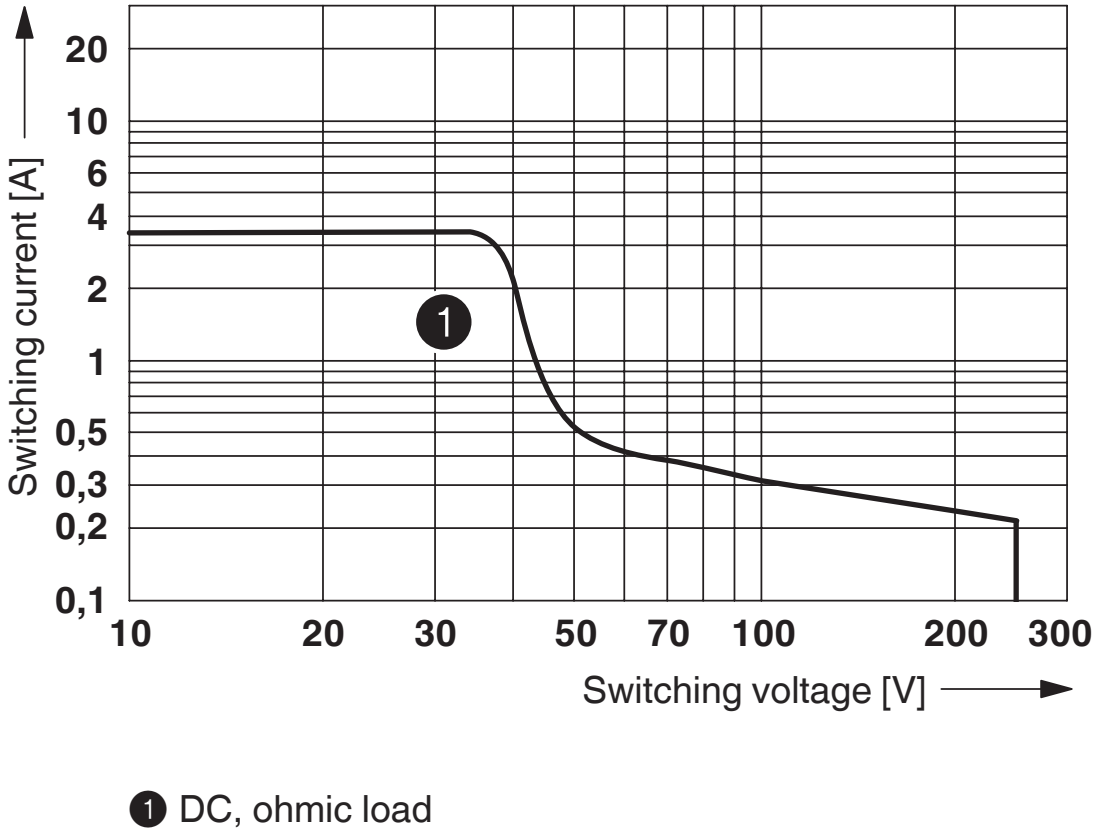

1 DC, ohmic load

Interrupting rating

Diagram

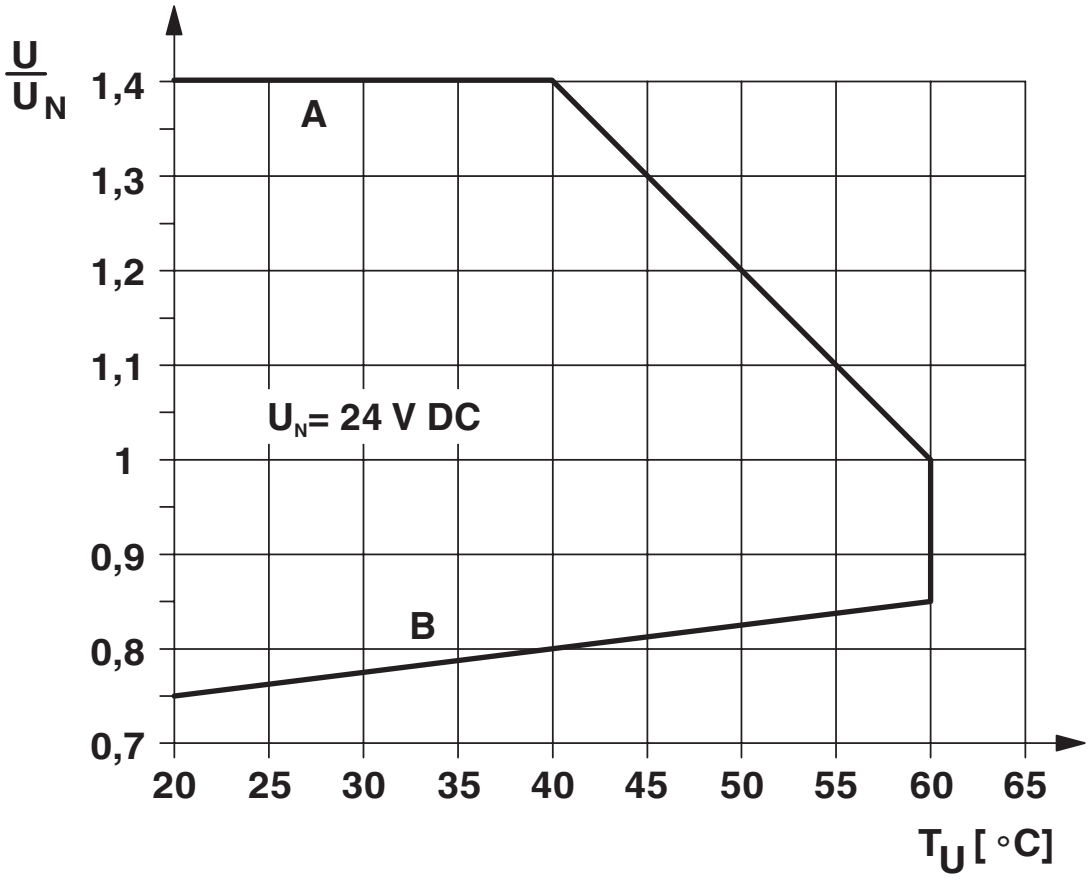

Operating voltage range

Diagram

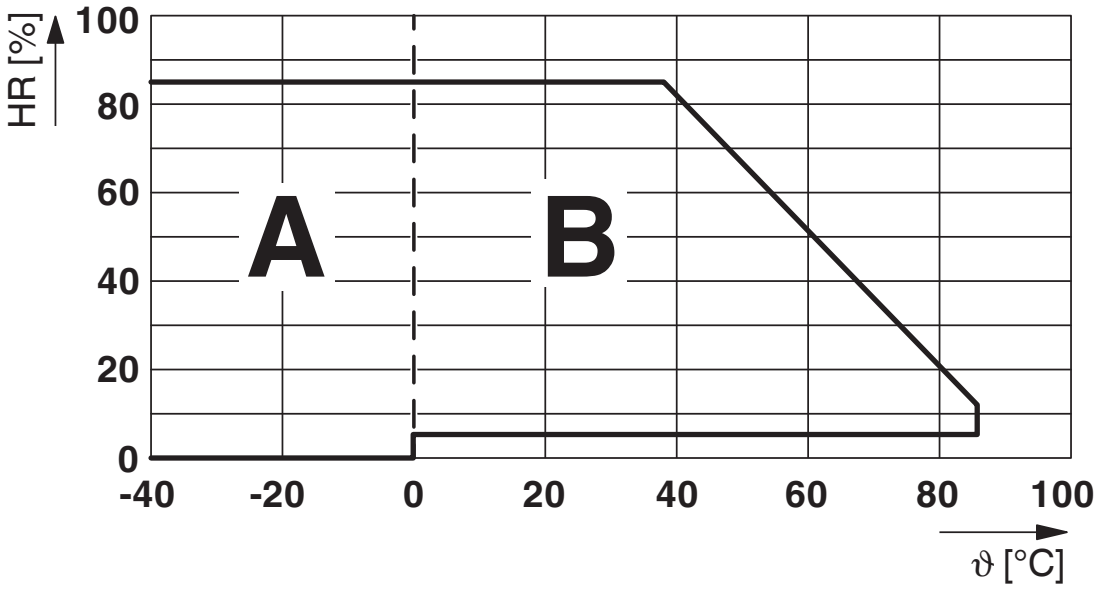

Permissible humidity for operation and storage.
The maximum permissible ambient temperature as specified in the data sheet must be observed.

Area A: Ice buildup at ambient temperatures ≤ 0°C must be prevented
Area B: Condensation at ambient temperatures > 0°C must be prevented

On 30 full days that are naturally distributed across an entire year, a humidity level of 95% is permissible at an ambient temperature ≤ 25°C.

Circuit diagram

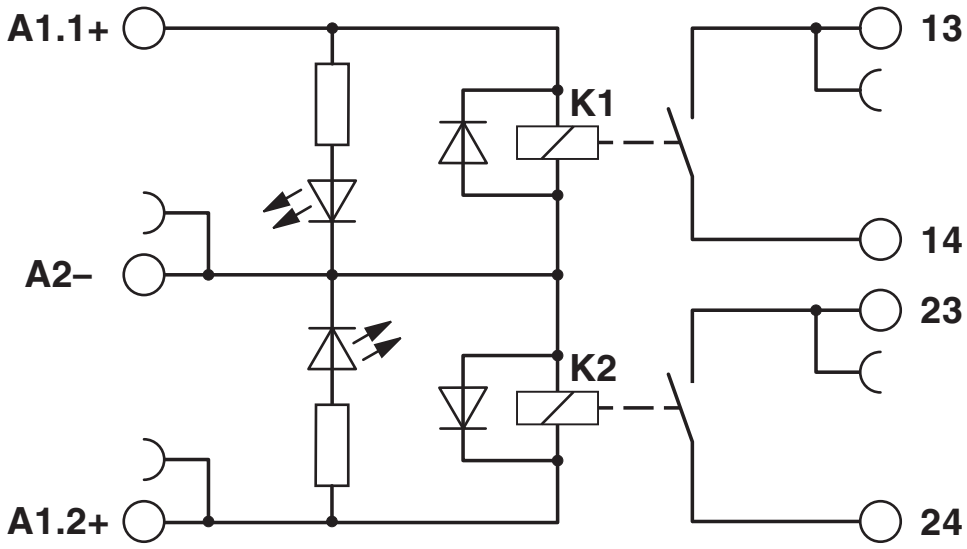

Approvals

To download certificates, visit the product detail page: https://www.phoenixcontact.com/us/products/2987309

EAC
Approval ID: RU*C-DE.*08.B.00010

cULus Listed
Approval ID: E140324

Classifications

ECLASS

ECLASS-13.0	27371601
ECLASS-15.0	27371601

ETIM

ETIM 9.0	EC001437

UNSPSC

UNSPSC 21.0	39122300

Environmental product compliance

EU RoHS

Fulfills EU RoHS substance requirements	Yes
Exemption	7(a), 7(c)-I

China RoHS

Environment friendly use period (EFUP)	EFUP-50
	An article-related China RoHS declaration table can be found in the download area for the respective article under "Manufacturer declaration". For all articles with EFUP-E, no China RoHS declaration table issued and required.

EU REACH SVHC

REACH candidate substance (CAS No.)	Lead(CAS: 7439-92-1)
SCIP	05dd2ace-5119-49fe-9dcd-afb89e7fecb7

Phoenix Contact 2025 © - all rights reserved
https://www.phoenixcontact.com

Phoenix Contact USA
586 Fulling Mill Road
Middletown, PA 17057, United States
(+717) 944-1300
info@phoenixcon.com