# CAPAROC E2 12-24DC/2-10A EX - Electronic circuit breaker

1344364

https://www.phoenixcontact.com/us/products/1344364

Please be informed that the data shown in this PDF document is generated from our online catalog. Please find the complete data in the user documentation. Our general terms of use for downloads are valid.



2-channel electronic circuit breaker module for protecting 12 V DC and 24 V DC loads against overload and short circuit. Nominal current adjustable from 2 A to 10 A via step switch. EX e approval for zone 2. For DIN rail installation via the CAPAROC current rails.

## Your advantages

- The customizable standard, thanks to individual combinations of the future-proof modular system
- Easy operation for everyone through tool-free assembly, uninterrupted installation, and transparent operating state
- Strikingly simple design-in with extensive support from the selection up to digital services

## Commercial data

| | |
|---|---|
| Item number | 1344364 |
| Packing unit | 1 pc |
| Minimum order quantity | 1 pc |
| Sales key | CL11 |
| Product key | CLA233 |
| GTIN | 4063151658120 |
| Weight per piece (including packing) | 94.3 g |
| Weight per piece (excluding packing) | 94.3 g |
| Customs tariff number | 85363010 |
| Country of origin | DE |

# Technical data

## Notes

### General

| | |
|---|---|
| Note | LABS release – in accordance with test specification VW PV 3. 10.7:2005-0 |
| | When connecting the conductor, make sure that the CAPAROC modules are not pulled apart due to tensile force. Gaps must not be created between the modules. |
| | Observe the specified conditions for use in potentially explosive areas. Install the device in a suitable approved housing with at least IP54 degree of protection that meets the requirements of IEC/EN 60079-0. Also observe the requirements of IEC/EN 60079-14. |

## Product properties

| | |
|---|---|
| Product type | Device circuit breakers |
| Product family | CAPAROC |
| Type | Plug-in module |
| Number of positions | 1 |
| No. of channels | 2 |
| Number of slots | 2 |

### Insulation characteristics

| | |
|---|---|
| Protection class | III |
| Pollution degree | 2 |

## Electrical properties

### General

| | |
|---|---|
| Operating voltage | 10 V DC ... 30 V DC |
| Rated voltage | 12 V DC |
| | 24 V DC |
| Rated current $I_N$ | 10 A DC (per channel) |
| Rated current $I_N$ | 2 / 4 / 6 / 8 / 10 A DC (Adjustable via rotary coding switches) |
| | 1 / 2 / 3 / 4 / 5 / 6 / 7 / 8 / 9 / 10 A DC (can be set, in RC mode via power module with communication interface) |
| Rated current (pre-adjusted) | 2 A |
| Rated surge voltage | 0.5 kV |
| Tripping method | E (electronic) |
| Feedback resistance | max. 35 V DC |
| Switch-on delay | 50 ms (each channel preset by default) |
| | can be adapted with CAPAROC PM IOL and CAPAROC PM PN power modules |
| Required backup fuse | Only required if $I_{max}$ of the power supply > the short-circuit switching capacity. Integrated failsafe element. |
| Short-circuit switching capacity | 300 A |

| | |
|---|---|
| Dielectric strength | 35 V DC (Load circuit) |
| Active current limitation | typ. 2.0 x $I_N$ at $I_N \leq 3$ A |
| | typ. 1.5 x $I_{N\ at}$ $I_N \geq 4$ A |
| Fuse | electronic |
| Efficiency | > 99 % |
| Closed circuit current $I_0$ | typ. 25 mA (no load at 24 V) |
| Power dissipation | typ. 0.6 W (no load at 24 V) |
| | < 3.3 W (in nominal operation at 24 V and 10 A) |
| Measuring tolerance I | ± 10 % (typ.) |
| Temperature derating | 20 A (Total current at 40°C) |
| | 10 A (Total current at 65 °C) |
| MTBF (IEC 61709, SN 29500) | 11140621 h (at 25 °C with 21 % load) |
| | 4699883 h (at 40°C with 34.25% load) |
| | 534110 h (at 40°C with 100% load) |
| Voltage drop | 0.14 V (at 10 A) |
| Fail-safe element | 15 A DC (per output channel) |
| Contact switching type | without electrical isolation |

Load circuit

| | |
|---|---|
| Shutdown time | 5 s (for overload 1.1…1.3 x $I_N$ at $I_N \geq 4$ A) |
| | 5 s (for overload 1.1…1.7 x $I_N$ at $I_N < 4$ A) |
| | typ. 400 ms (max. 450 ms for high starting currents) |
| | typ. 20 ms (for short circuit > 1,5 x $I_N$) |
| Undervoltage switch-off | ≤ 8.5 V DC (active) |
| | ≥ 9.2 V DC (inactive) |
| Overvoltage switch-off | ≥ 32.5 V DC (active) |
| | ≤ 30.5 V DC (inactive) |
| Max. capacitive load | ≤ 75000 µF (Depending on the current setting and the short-circuit current available) |

## Connection data

Fuse-protected output

| | |
|---|---|
| Connection method | Push-in connection |
| Stripping length | 10 mm |
| Conductor cross-section flexible | 0.2 mm² ... 4 mm² |
| Conductor cross-section rigid | 0.2 mm² ... 4 mm² |
| Conductor cross-section AWG | 24 ... 12 |
| Conductor cross-section, flexible, with ferrule, with plastic sleeve | 0.25 mm² ... 4 mm² |
| Conductor cross-section flexible, with ferrule without plastic sleeve | 0.25 mm² ... 4 mm² |

## Signaling

| | |
|---|---|
| Channel LED off | off (Channel switched off) |
| Channel LED yellow | lit (Channel switched on, channel load > 80% ) |
| | two flashes (Check the installation, no communication to power |

| | |
|---|---|
| | module) |
| Channel LED green | lit (Channel switched on) |
| | flashing (Channel switched on, coding switch position is not equal to set value) |
| Channel LED red | lit (Channel switched off, over- or undervoltage active) |
| | ON temporarily (Channel switched off, 5 s cool-down phase, overload or short-circuit release) |
| | flashing (Channel switched off, ready to be switched back on, overload or short-circuit release) |
| | two flashes (Channel switched off, system total current limit exceeded) |
| Channel LED red-yellow | flashing (Channel is overloaded and is switched off) |
| Channel LED red-green | flashing (Channel switched off, programming mode active, current adjustment after overload or short-circuit release) |

## Dimensions

| | |
|---|---|
| Dimensional drawing | 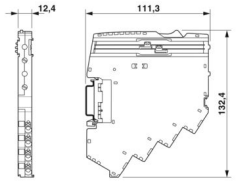 |
| Width | 12.4 mm |
| Height | 132.4 mm |
| Depth | 111.3 mm (incl. DIN rail 7.5 mm) |

## Material specifications

| | |
|---|---|
| Color | light gray (RAL 7035) |
| Material | PA 6 |
| | PA 6 |
| | PA 6 |
| | PC |
| Flammability rating according to UL 94 | V-0 |

## Environmental and real-life conditions

Ambient conditions

| | |
|---|---|
| Degree of protection | IP20 |
| Ambient temperature (operation) | -30 °C ... 65 °C (The temperature range of the power module must be taken into consideration) |
| Ambient temperature (storage/transport) | -40 °C ... 70 °C |
| Altitude | ≤ 4000 m (amsl) |
| Humidity test | 96 h, 95 % RH, 40 °C |
| Shock (operation) | 30g (11 ms period, half-sine shock pulse, according to IEC 60068-2-27) |
| | 25g (6 ms duration, half-sine shock pulse in accordance with IEC 60068-2-27, continuous shock) |

| | |
|---|---|
| Vibration (operation) | 5g (10 Hz ... 150 Hz / 10 cycles / axis / X, Y, Z) |

## Approvals

UL approval

| | |
|---|---|
| Identification | UL/C-UL Listed UL 508 |
| | UL Recognized UL 2367 |
| | UL 121201 Class I, Division 2, Groups A, B, C, D, T4A |

ATEX

| | |
|---|---|
| Identification | TÜV 22 ATEX 8874 X |
| | II 3G Ex ec IIC T4 Gc |

IECEx

| | |
|---|---|
| Identification | IECEx TUR 22.0049X |
| | II 3G Ex ec IIC T4 Gc |

UKCA Ex (UKEX)

| | |
|---|---|
| Identification | TÜV 22 UKEX 7109 X |
| | II 3G Ex ec IIC T4 Gc |

Corrosive gas test

| | |
|---|---|
| Identification | ISA S71.04.2013 G3 Harsh Group A |

## Standards and regulations

| | |
|---|---|
| Standards/specifications | EN 61000-6-2 |
| Note | EMC – Immunity for industrial areas |
| Standards/specifications | EN 61000-6-3 |
| Note | EMC – Emission for residential, business and commercial properties and small operations |
| Standards/specifications | EN 60068-2-78 |
| Note | Environmental influences – Moisture and heat, constant |
| Standards/specifications | EN 50178 |
| Note | Equipping power installations with electronic equipment |
| Standards/specifications | EN 60068-2-6 |
| Note | Environmental influences – Vibrations (sinusoidal) |
| Standards/specifications | EN 60068-2-27 |
| Note | Environmental influences – Shocks |
| Standards/specifications | IEC 60079-7 |
| Note | Explosive atmospheres – Part 7: Equipment protection by increased safety “e” |
| Standards/specifications | IEC 60079-0 |
| Note | Explosive atmospheres – Part 0: Equipment – General requirements |

## Mounting

| | |
|---|---|
| Mounting type | pluggable onto CAPAROC CR… current rail |

## Drawings

Dimensional drawing

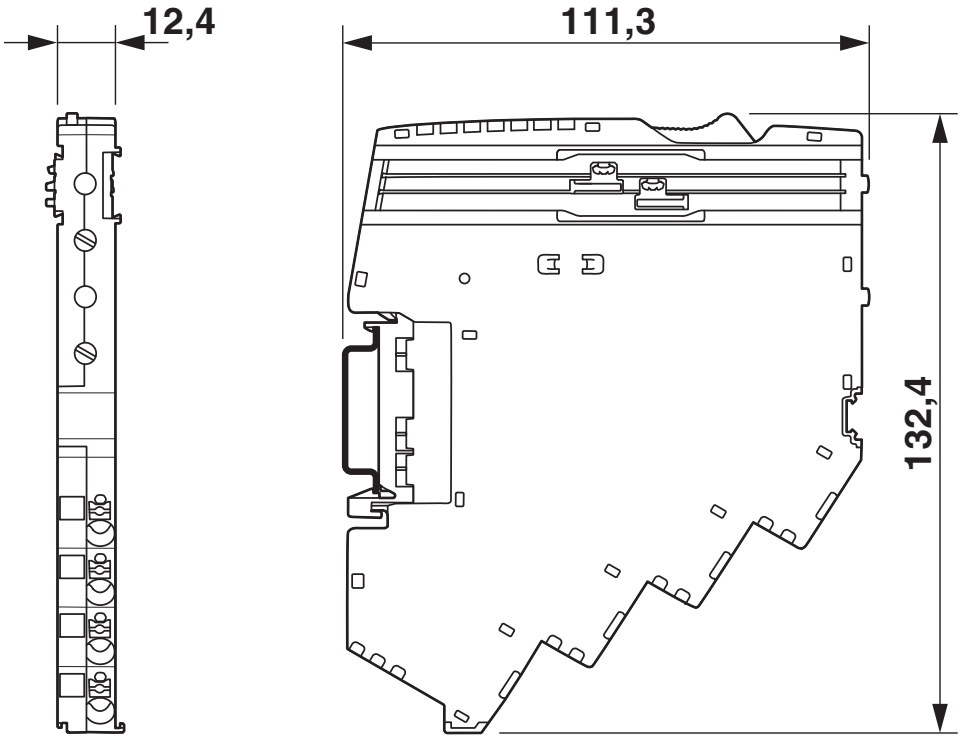

Diagram

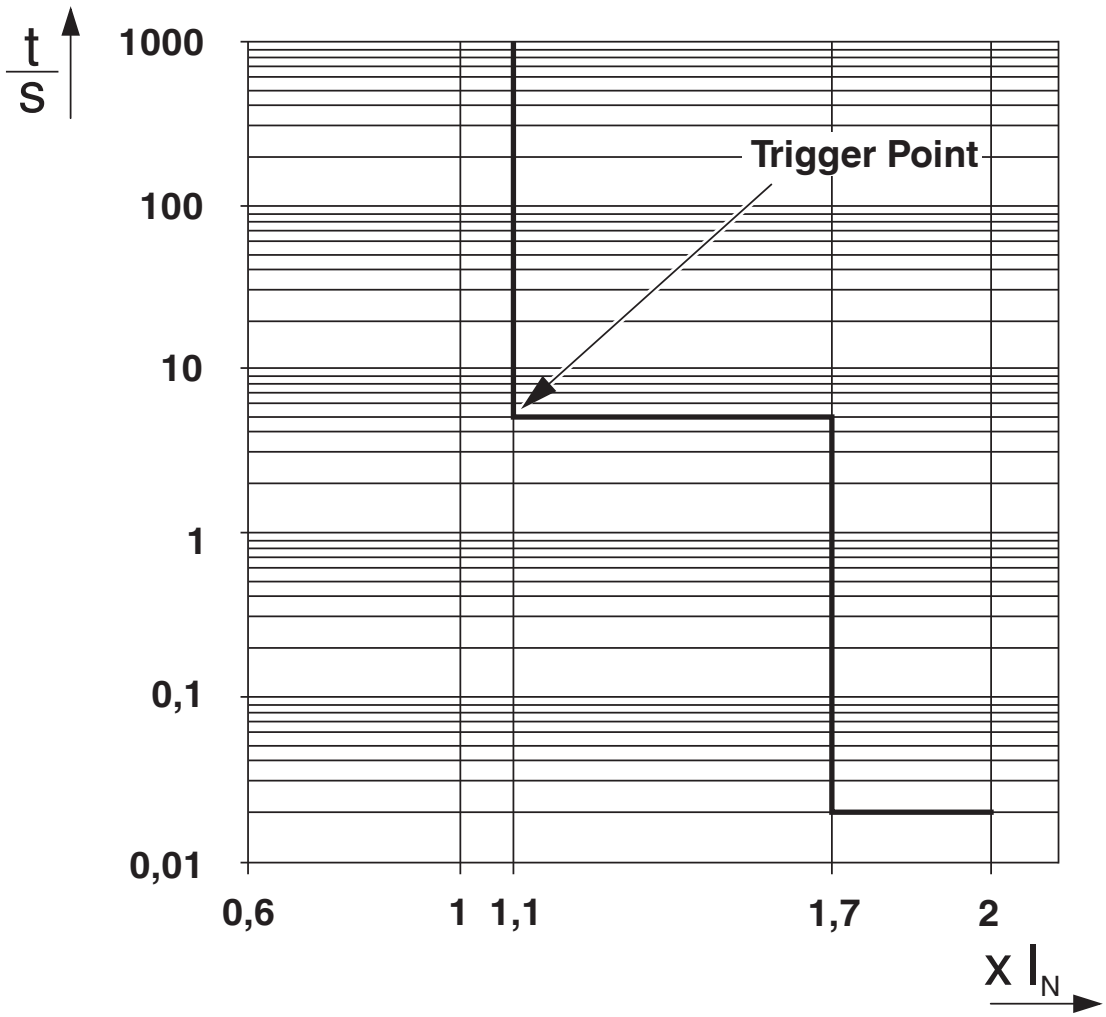


Tripping characteristic < 4 A

Diagram

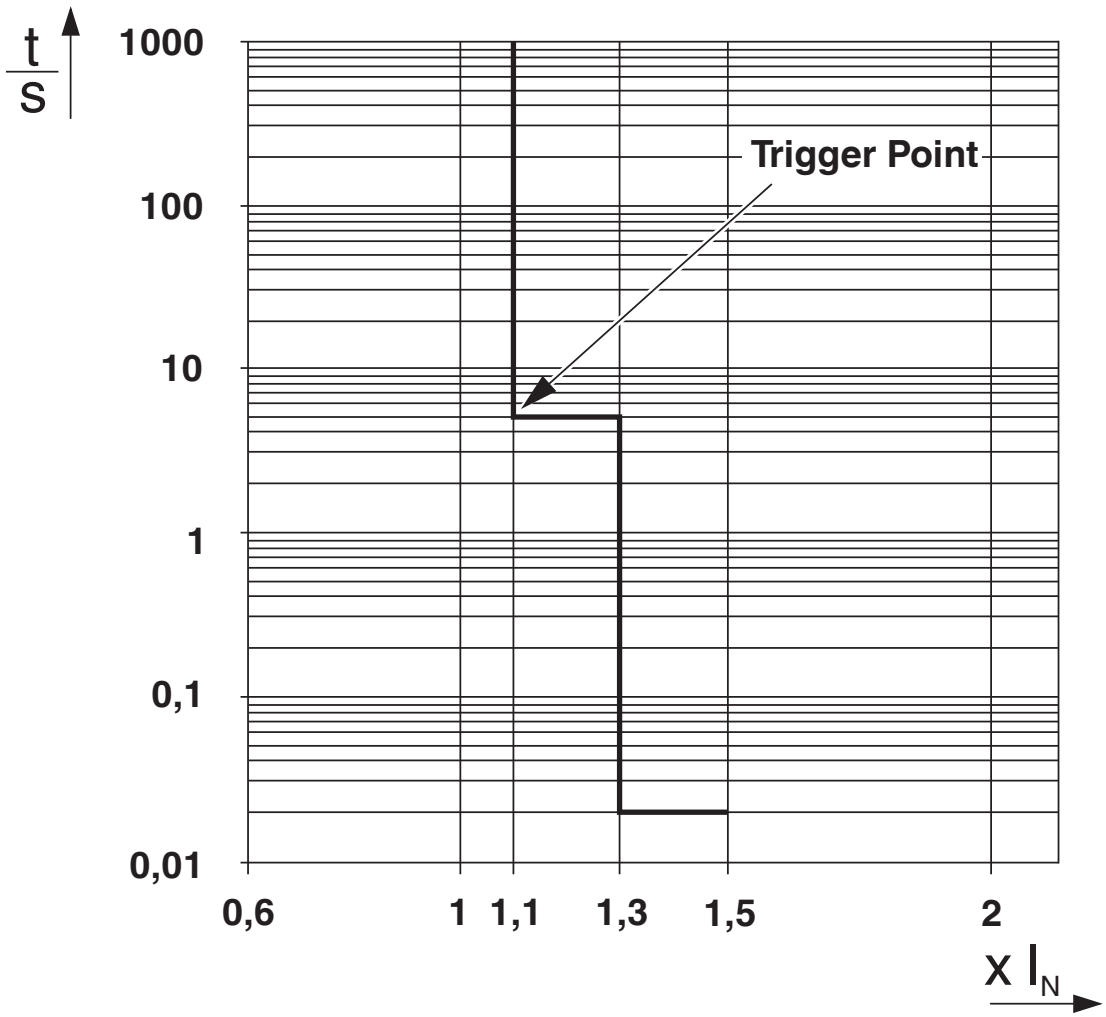


Tripping characteristic ≥ 4 A

Diagram

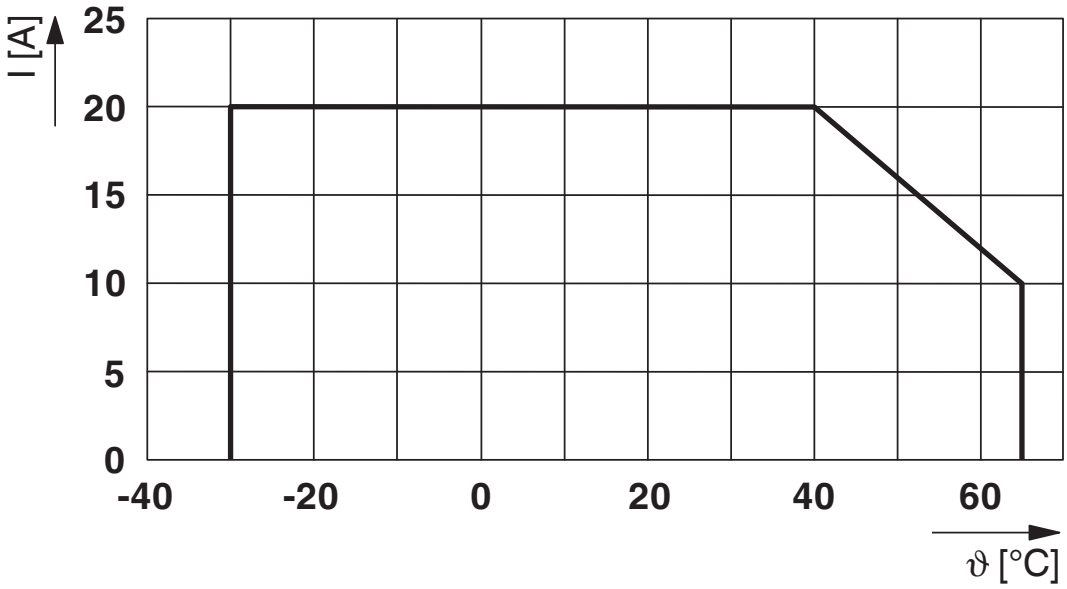


Max. permissible current in relation to the ambient temperature

Block diagram

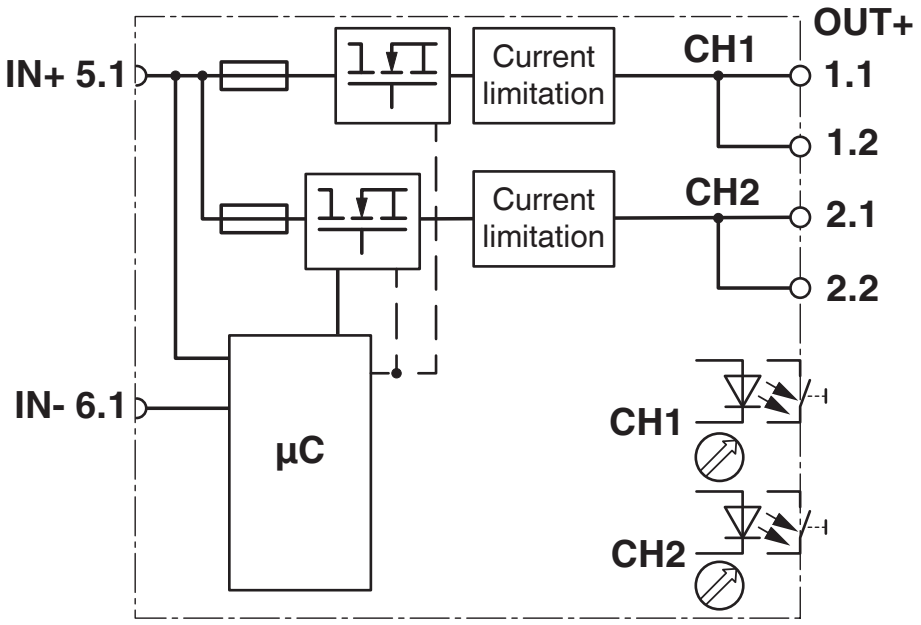

## Approvals

To download certificates, visit the product detail page: https://www.phoenixcontact.com/us/products/1344364

**UL Recognized**
Approval ID: FILE E 317172

**UL Listed**
Approval ID: E123528

**cUL Listed**
Approval ID: E123528

**IECEx**
Approval ID: IECEx TUR 22.0049X

**UL Recognized**
Approval ID: FILE E 324415

**cUL Listed**
Approval ID: FILE E 483407

**UL Listed**
Approval ID: FILE E 483407

**ATEX**
Approval ID: TÜV 22 ATEX 8874 X

**UKCA-EX**
Approval ID: TÜV 22 UKEX 7109 X

## Classifications

### ECLASS

| | |
|---|---|
| ECLASS-13.0 | 27140401 |
| ECLASS-15.0 | 27140401 |

### ETIM

| | |
|---|---|
| ETIM 9.0 | EC003538 |

## Environmental product compliance

EU RoHS

| | |
|---|---|
| Fulfills EU RoHS substance requirements | Yes |
| Exemption | 7(a), 7(c)-I |

China RoHS

| | |
|---|---|
| Environment friendly use period (EFUP) | EFUP-50 |
| | An article-related China RoHS declaration table can be found in the download area for the respective article under "Manufacturer declaration". For all articles with EFUP-E, no China RoHS declaration table issued and required. |

EU REACH SVHC

| | |
|---|---|
| REACH candidate substance (CAS No.) | Lead(CAS: 7439-92-1) |
| | 2,2',6,6'-tetrabromo-4,4'-isopropylidenediphenol(CAS: 79-94-7) |
| SCIP | 85c70129-336f-4594-a930-4bb93bf94c07 |


Phoenix Contact 2025 © - all rights reserved
https://www.phoenixcontact.com



Phoenix Contact USA
586 Fulling Mill Road
Middletown, PA 17057, United States
(+717) 944-1300
info@phoenixcon.com