Data sheet | Item number: 734-432/001-000

THT double-deck male header; 1.0 x 1.0 mm solder pin; angled; 100% protected against mismating; Pin spacing 3.81 mm; 4-pole; orange

www.wago.com/734-432/001-000

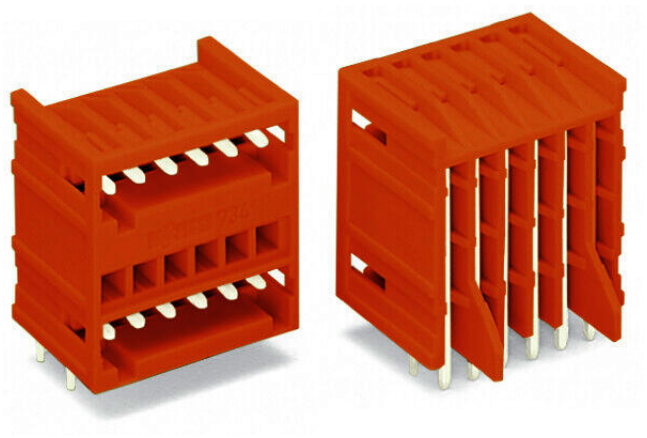

Picture differs from the item.

Color:

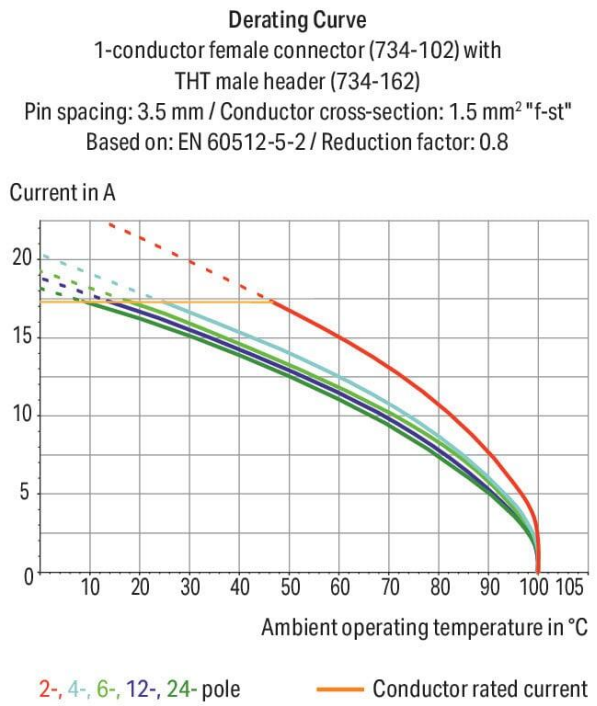

Subject to changes. Please also observe the further product documentation!

WAGO GmbH & Co. KG
Hansastr. 27
32423 Minden
Phone: +49571 887-0 | Fax: +49571 887-169
Email: info.de@wago.com | Web: www.wago.com

Do you have any questions about our products?
We are always happy to take your call at +49 (571) 887-44222.

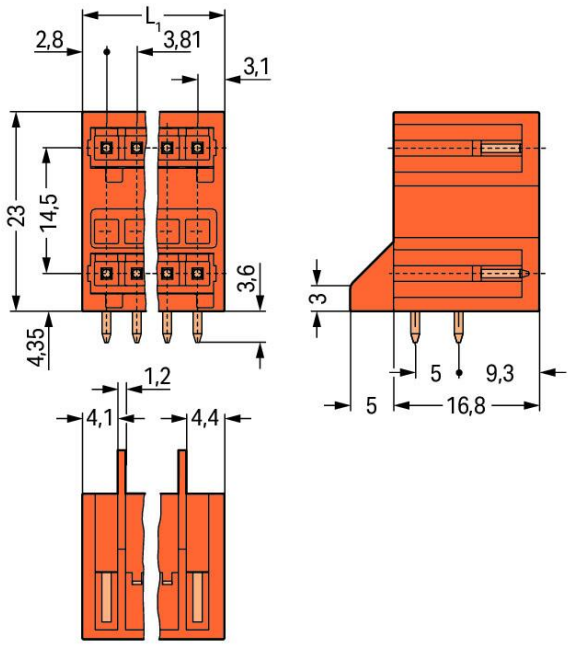

Dimensions in mm
L_1 = (pole no./2 – 1) x pin spacing + 5.9 mm

Item description

- Horizontal or vertical PCB mounting via straight or angled solder pins
- 100% protected against mismating; only mating halves with the same number of poles can be connected together
- Coding option available

Data
Notes

Safety information	The *MCS – MULTI CONNECTION SYSTEM* includes connectors without breaking capacity in accordance with DIN EN 61984. When used as intended, these connectors must not be connected /disconnected when live or under load.When used as intended, these connectors must not be connected/disconnected when live or under load. The circuit design should ensure header pins, which can be touched, are not live when unmated.
Variants:	Other pole numbers Gold-plated or partially gold-plated contact surfaces Other versions (or variants) can be requested from WAGO Sales or configured at https://configurator.wago.com/.

Subject to changes. Please also observe the further product documentation!

WAGO GmbH & Co. KG
Hansastr. 27
32423 Minden
Phone: +49571 887-0 | Fax: +49571 887-169
Email: info.de@wago.com | Web: www.wago.com

Do you have any questions about our products?
We are always happy to take your call at +49 (571) 887-44222.

Electrical data

Ratings per IEC/EN

Ratings per	IEC/EN 60664-1
Nominal voltage (III/3)	160 V
Rated impulse voltage (III/3)	2.5 kV
Rated voltage (III/2)	160 V
Rated impulse voltage (III/2)	2.5 kV
Nominal voltage (II/2)	320 V
Rated surge voltage (II/2)	2.5 kV
Rated current	10 A
Legend (ratings)	(III / 2) ≙ Overvoltage category III / Pollution degree 2

Ratings per UL

Approvals per	UL 1059
Rated voltage UL (Use Group B)	300 V
Rated current UL (Use Group B)	10 A
Rated voltage UL (Use Group D)	300 V
Rated current UL (Use Group D)	10 A

Ratings per CSA

Approvals per	CSA
Rated voltage CSA (Use Group B)	300 V
Rated current CSA (Use Group B)	10 A
Rated voltage CSA (Use Group D)	300 V
Rated current CSA (Use Group D)	10 A

Connection data

Total number of potentials	4
Number of connection types	1
Number of levels	2

Connection 1

Pole number	4

Subject to changes. Please also observe the further product documentation!

WAGO GmbH & Co. KG
Hansastr. 27
32423 Minden
Phone: +49571 887-0 | Fax: +49571 887-169
Email: info.de@wago.com | Web: www.wago.com

Do you have any questions about our products?
We are always happy to take your call at +49 (571) 887-44222.

Physical data

Pin spacing	3.81 mm / 0.15 inches
Width	9.71 mm / 0.382 inches
Height	26.6 mm / 1.047 inches
Height from the surface	23 mm / 0.906 inches
Depth	21.8 mm / 0.858 inches
Solder pin length	3.6 mm
Solder pin dimensions	1 x 1 mm
Drilled hole diameter with tolerance	1.4 $^{(+0.1)}$ mm

Mechanical data

Variable coding	Yes
Anti-rotation protection	Yes

Plug-in connection

Contact type (pluggable connector)	Male connector/plug
Connector (connection type)	for PCB
Mismating protection	Yes
Plugging without loss of pin spacing	No
Mating direction to the PCB	0 °
Locking of plug-in connection	none

PCB contact

PCB contact	THT
Solder pin arrangement	over the entire male connector (in-line)
Number of solder pins per potential	1

Material data

Note (material data)	Information on material specifications can be found here
Color	orange
Material group	I
Insulation material	Polyamide (PA66)
Flammability class per UL94	V0

Subject to changes. Please also observe the further product documentation!

WAGO GmbH & Co. KG
Hansastr. 27
32423 Minden
Phone: +49571 887-0 | Fax: +49571 887-169
Email: info.de@wago.com | Web: www.wago.com

Do you have any questions about our products?
We are always happy to take your call at +49 (571) 887-44222.

Contact material	Electrolytic copper (E_{Cu})
Contact plating	Tin
Fire load	0.056 MJ
Weight	3 g

Environmental requirements

Limit temperature range	-60 … +100 °C
Processing temperature	-35 … +60 °C

Commercial data

Product Group	3 (Multi Conn. System)
eCl@ss 10.0	27-44-04-02
eCl@ss 9.0	27-44-04-02
ETIM 8.0	EC002637
ETIM 7.0	EC002637
ECCN	NO DATA
PU (SPU)	100 pcs
Packaging type	box
Country of origin	DE
GTIN	4044918873109
Customs tariff number	85366930000

Environmental Product Compliance

RoHS Compliance Status	Compliant,No Exemption

Approvals / Certificates

General approvals

Logo	Approval	Additional Approval Text	Certificate name
	CB DEKRA Certification B.V.	EN 61984	NL-54190
	CCC CQC	GB/T 13140.1	CQC03003003013
	CSA DEKRA Certification B.V.	C22.2	1465035

Subject to changes. Please also observe the further product documentation!

WAGO GmbH & Co. KG
Hansastr. 27
32423 Minden
Phone: +49571 887-0 | Fax: +49571 887-169
Email: info.de@wago.com | Web: www.wago.com

Do you have any questions about our products?
We are always happy to take your call at +49 (571) 887-44222.

	KEMA/KEUR DEKRA Certification B.V.	EN 61984	71-105522
	UL Underwriters Laboratories Inc.	UL 1977	E 45171
	UR Underwriters Laboratories Inc.	UL 1059	E45172

Approvals for marine applications

Logo	Approval	Additional Approval Text	Certificate name
	DNV DNV GL SE	-	TAE000016Z

Counterpart

Item no.734-202
1-conductor female connector; CAGE CLAMP®; 1.5 mm²; Pin spacing 3.81 mm; 2-pole; 100% protected against mismating; 1,50 mm²; orange

www.wago.com/734-202

Optional accessories

Coding

Coding		
	Item no.: 734-159 Coding key; to be snapped above top level; black	www.wago.com/734-159
	Item no.: 734-400 Coding key; to be snapped above bottom level; light gray	www.wago.com/734-400
	Item no.: 734-130 Coding key; to be snapped above top level; white	www.wago.com/734-130

Subject to changes. Please also observe the further product documentation!

WAGO GmbH & Co. KG
Hansastr. 27
32423 Minden
Phone: +49571 887-0 | Fax: +49571 887-169
Email: info.de@wago.com | Web: www.wago.com

Do you have any questions about our products?
We are always happy to take your call at +49 (571) 887-44222.

Downloads

Documentation

Additional Information

Technical Section Technical explanations	2019 年4月3日	pdf 2.1 MB	Download

CAD/CAE-Data

CAD data

2D/3D Models 734-432/001-000	URL	Download

CAE data

EPLAN Data Portal 734-432/001-000	URL	Download
ZUKEN Portal 734-432/001-000	URL	Download
EPLAN Data Portal 734-432/001-000	URL	Download

PCB Design

Symbol and Footprint via Ultra Librarian 734-432/001-000	URL	Download

CAx data for your PCB design, consisting of "schematic symbols and PCB footprints", allow easy integration of the WAGO component into your development environment.

Supported formats:

- Accel EDA 14 & 15
- Altair
- Altium 6 to current version
- Autodesk Fusion 360
- Cadence Allegro
- DesignSpark
- Eagle Libraries
- KiCad
- Mentor Graphics
- BoardStation
- Mentor Graphics Design Architect

Subject to changes. Please also observe the further product documentation!

WAGO GmbH & Co. KG
Hansastr. 27
32423 Minden
Phone: +49571 887-0 | Fax: +49571 887-169
Email: info.de@wago.com | Web: www.wago.com

Do you have any questions about our products?
We are always happy to take your call at +49 (571) 887-44222.

- Mentor Graphics Design
- Expedition 99 and 2000
- OrCAD 9.X PCB and Capture
- PADS PowerPCB 3, 3.5, 4.X, and 5.X
- PADS PowerPCB and PowerLogic 3.0
- PCAD 2000, 2001, 2002, 2004, and 2006
- Pulsonix 8.5 or newer
- STL
- 3D STEP
- TARGET 3001!
- View Logic ViewDraw
- Quadcept
- Zuken CadStar 3 and 4
- Zuken CR-5000 and CR-8000
- Zuken eCADSTAR 2020 and 2021Zuken CR-5000 and CR-8000

PCB Component Libraries (EDA), PCB CAD Library Ultra Librarian

Symbol and Footprint via SamacSys 734-432/001-000 CAx data for your PCB design, consisting of "schematic symbols and PCB footprints", allow easy integration of the WAGO component into your development environment.	URL	Download

Supported formats:

- 3D (stp)
- Altium
- CADSTAR
- Capture
- CircuitStudio
- CR-5000
- CR-8000
- DEHDL
- DesignSpark PCB
- DesignSpark PCB PRO
- DipTrace
- EAGLE
- Easy-PC
- EasyEDA
- eCADSTAR

Subject to changes. Please also observe the further product documentation!

WAGO GmbH & Co. KG
Hansastr. 27
32423 Minden
Phone: +49571 887-0 | Fax: +49571 887-169
Email: info.de@wago.com | Web: www.wago.com

Do you have any questions about our products?
We are always happy to take your call at +49 (571) 887-44222.

- KiCad
- OrCAD_Allegro16
- PADS
- Proteus
- Pulsonix
- Quadcept
- SOLIDWORKS PCB
- TARGET 3001!
- xDX Designer
- Xpedition

PCB Component Libraries (EDA), PCB CAD Library SamacSys Electronic Component Search Engine

Asset Administration Shell

Asset Administration Shell 734-432/001-000	URL	Download

Environmental Product Compliance

Compliance Search

Environmental Product Compliance 734-432/001-000 THT double-deck male header; 1.0 x 1.0 mm solder pin; angled; 100% protected against mismating; Pin spacing 3.81 mm; 4-pole; orange	URL	Download

Installation Notes

Coding

WAGO GmbH & Co. KG
Hansastr. 27
32423 Minden
Phone: +49571 887-0 | Fax: +49571 887-169
Email: info.de@wago.com | Web: www.wago.com

Do you have any questions about our products?
We are always happy to take your call at +49 (571) 887-44222.

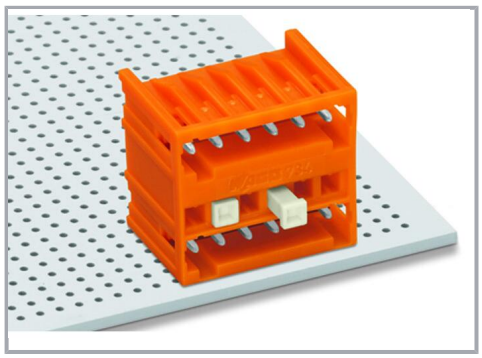

Coding a THT double-deck male header – lower level.

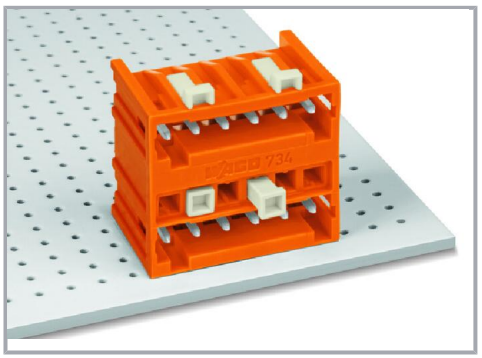

Coding a THT double-deck male header.

Product family

MCS MINI
Show all products from the family

Subject to changes. Please also observe the further product documentation!

WAGO GmbH & Co. KG
Hansastr. 27
32423 Minden
Phone: +49571 887-0 | Fax: +49571 887-169
Email: info.de@wago.com | Web: www.wago.com

Do you have any questions about our products?
We are always happy to take your call at +49 (571) 887-44222.