ORDER NO.	WOODHEAD NO.	COLOR
130149-0049	2848MB	WHITE

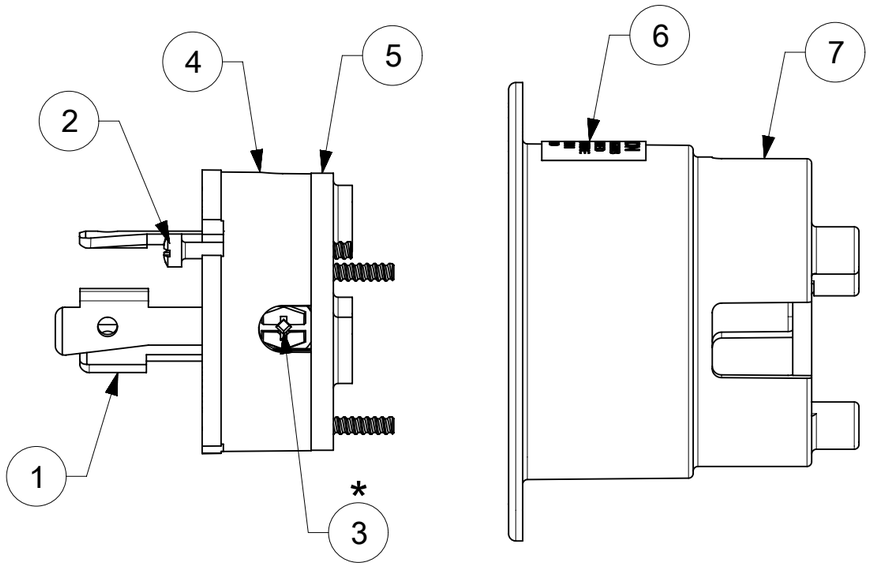

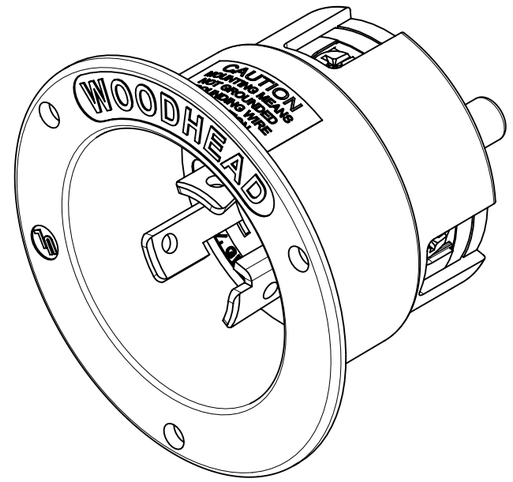

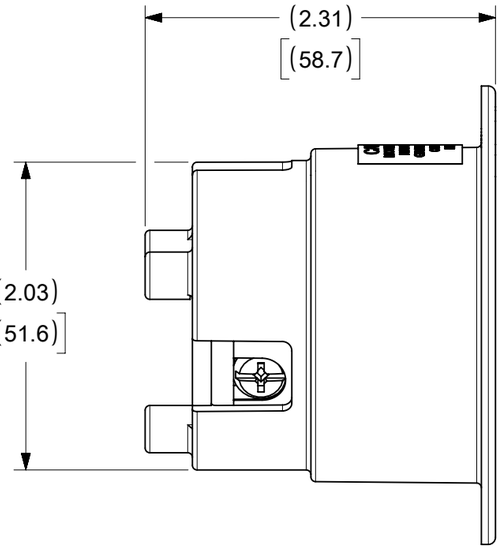

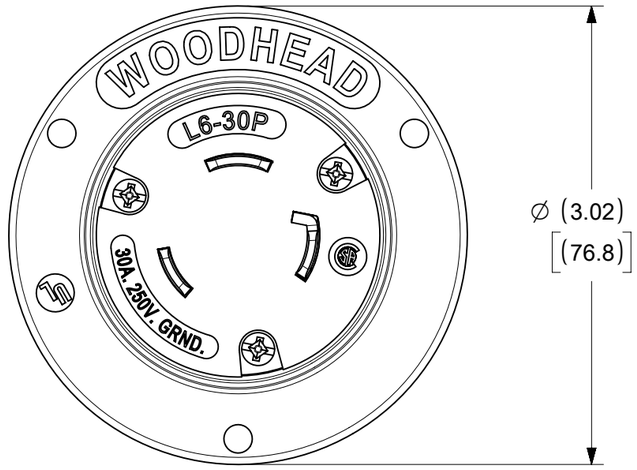

WIRING TERMINATION

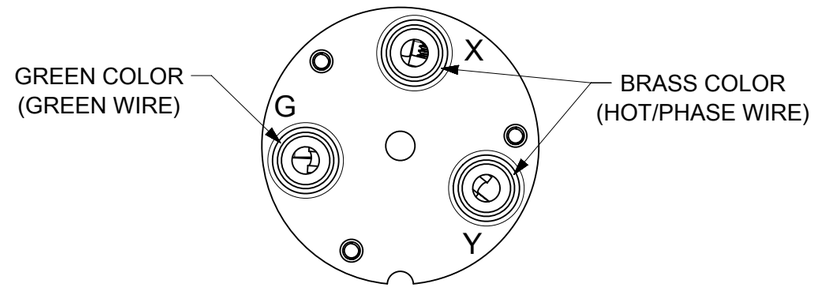

* FOR SCREW TORQUE, SEE ASSEMBLY INSTRUCTIONS

ITEM NO.	DESCRIPTION	MATERIAL	QTY.
1	BLADES	BRASS, NICKEL PLATED	3
2	RETAINING SCREWS	STAINLESS STEEL	3
3	TERMINAL SCREWS/CLAMP ASSEMBLY	BRASS, ZINC PLATED	3
4	INSERT	NYLON	1
5	TERMINAL COVER	POLYCARBONATE	1
6	CAUTION LABEL	PLASTIC	1
7	FLANGED OUTLET HOUSING	NYLON	1

DOCUMENT STATUS	P1	RELEASE DATE	2023/12/07 00:36:12

FORMAT: Eng-lega-master-tb-prod-B
REVISION: E
DATE: 2020/01/14

FUNCTIONAL SYMBOLS: EA = 0; EC = 0; EP = 0
DIVISIONAL SYMBOLS

THIS DRAWING CONTAINS INFORMATION THAT IS PROPRIETARY TO MOLEX ELECTRONIC TECHNOLOGIES, LLC AND SHOULD NOT BE USED WITHOUT WRITTEN PERMISSION

DIMENSION UNITS: INCH/MM
SCALE: NTS

GENERAL TOLERANCES (UNLESS SPECIFIED)

	MM	INCH
4 PLACES	±	±
3 PLACES	±	± 0.005
2 PLACES	±	± 0.01
1 PLACE	±	±
0 PLACES	±	±
ANGULAR TOL	± 0.5 °	

DRAFT WHERE APPLICABLE MUST REMAIN WITHIN DIMENSIONS

CURRENT REV DESC: MIGRATION TO ECTR/NX

EC NO: 668440
DRWN: VHANDI 2021/06/16
CHK'D: DNGUYEN62 2023/12/06
APPR: HKNEELAND 2023/12/07

INITIAL REVISION:
DRWN: VHANDI 2021/06/16
APPR: HKNEELAND 2023/12/07

THIRD ANGLE PROJECTION

molex

FLANGED INLET NEMA L6-30 SIZE C

PRODUCT CUSTOMER DRAWING

DOCUMENT NUMBER	DOC TYPE	DOC PART	REVISION
1301490049	PSD	000	A

DRAWING	SERIES	MATERIAL NUMBER	CUSTOMER	SHEET NUMBER
B-SIZE	130149	SEE TABLE	GENERAL MARKET	1 OF 1