1-178802-8 ✔ ACTIVE

Dynamic Series | Dynamic 3000 Series

TE Internal #: 1-178802-8

10 Position, Housing for Male Terminals, Housing, Crimp, Wire-to-Wire, 3.81 mm [.15 in] Centerline, 1 Row, Wire & Cable, Dynamic 3000 Series

View on TE.com >

Connectors > Rectangular Connectors > Standard Rectangular Connectors > Receptacle and Tab Housing: 3.81 mm pitch, 250V







Connector Product Type: **Housing**

Connector & Housing Type: **Housing for Male Terminals**

Mating Retention: **With**

Termination Method to Wire & Cable: **Crimp**

Connector System: **Wire-to-Wire**

All Receptacle and Tab Housing: 3.81 mm pitch, 250V (45)

Features

Product Type Features

Connector Product Type	Housing
Connector & Housing Type	Housing for Male Terminals
Connector System	Wire-to-Wire
Sealable	No
Connector & Contact Terminates To	Wire & Cable

Configuration Features

Number of Positions	10
Number of Rows	1

Body Features

Primary Product Color	Black

Termination Features

Termination Method to Wire & Cable	Crimp

Mechanical Attachment

Mating Retention	With
Connector Mounting Type	Panel Mount

Housing Features

Centerline (Pitch)	3.81 mm[.15 in]

Usage Conditions

Operating Temperature Range	-55 – 105 °C[-67 – 221 °F]

Operation/Application

Circuit Application	Power & Signal

Product Compliance

For compliance documentation, visit the product page on TE.com>

EU RoHS Directive 2011/65/EU	Compliant
EU ELV Directive 2000/53/EC	Compliant
China RoHS 2 Directive MIIT Order No 32, 2016	No Restricted Materials Above Threshold
EU REACH Regulation (EC) No. 1907/2006	Current ECHA Candidate List: JUNE 2025 (250) Candidate List Declared Against: JUNE 2025 (250) Does not contain REACH SVHC
Halogen Content	Not Low Halogen - contains Br or Cl > 900 ppm.
Solder Process Capability	Not applicable for solder process capability

Product Compliance Disclaimer

This information is provided based on reasonable inquiry of our suppliers and represents our current actual knowledge based on the information they provided. This information is subject to change. The part numbers that TE has identified as EU RoHS compliant have a maximum concentration of 0.1% by weight in homogenous materials for lead, hexavalent chromium, mercury, PBB, PBDE, DBP, BBP, DEHP, DIBP, and 0.01% for cadmium, or qualify for an exemption to these limits as defined in the Annexes of Directive 2011/65/EU (RoHS2). Finished electrical and electronic equipment products will be CE marked as required by Directive 2011/65/EU. Components may not be CE marked. Additionally, the part numbers that TE has identified as EU ELV compliant have a maximum concentration of 0.1% by weight in homogenous materials for lead, hexavalent chromium, and mercury, and 0.01% for cadmium, or qualify for an exemption to these limits as defined in the Annexes of Directive 2000/53/EC (ELV). Regarding the REACH Regulation, the information TE provides on SVHC in articles for this part number is based on the latest European Chemicals Agency (ECHA) ‘Guidance on requirements for substances in articles’ posted at this URL: https://echa.europa.eu/guidance-documents/guidance-on-reach

Compatible Parts



TE Part # CAT-D9934-A75
Contact: Component To Wire; 15A, 28-14 wire size

Also in the Series | Dynamic 3000 Series



Connector Contacts(94)

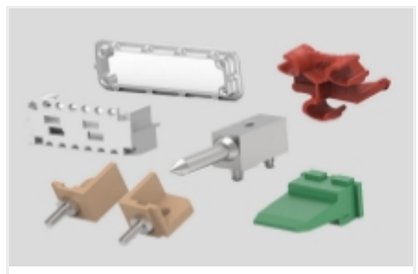

Connector Hardware(8)



Power Contacts(94)



Rectangular Connector Housings(143)



Rectangular Power Connectors(443)

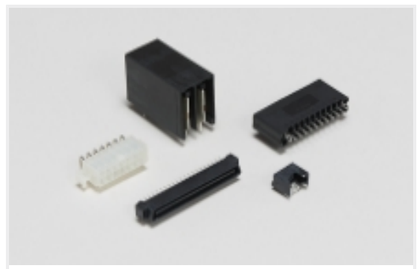

Standard Rectangular Connectors(167)

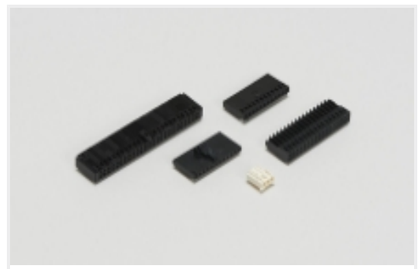

Wire-to-Board Connector Assemblies & Housings(92)

Customers Also Bought



TE Part #CAT-D9934-A75A
Receptacle and Tab Housing: 3.81 mm pitch, 250V



TE Part #2-1903131-3
DYNAMIC 1200D TAB HSG 6P P/M BLACK Y

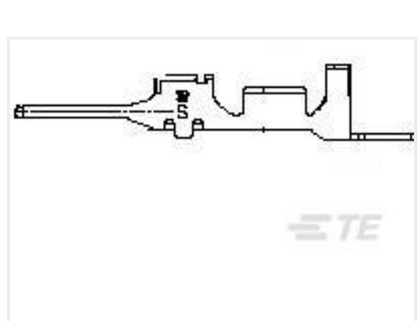

TE Part #2040016-2
DYNAMIC D4200 TAB CONT S



TE Part #1-2040404-4
DYNAMIC 1500T TAB HSG 12PX P/M



TE Part #4-2295044-4
RITS CONN. PLUG ASSY 4P GREEN TIN



TE Part #6609037-4
3EP7M=F7172 S0

Documents

Product Drawings

DYNAMIC D-3 TAB HSG 10P

English

CAD Files

3D PDF

3D

Customer View Model

ENG_CVM_CVM_1-178802-8_GN_c-1-178802-8-gn.2d_dxf.zip

English

Customer View Model

ENG_CVM_CVM_1-178802-8_GN_c-1-178802-8-gn.3d_igs.zip

English

Customer View Model

ENG_CVM_CVM_1-178802-8_GN_c-1-178802-8-gn.3d_stp.zip

English

By downloading the CAD file I accept and agree to the Terms and Conditions of use.

Product Specifications

Product Specification

English

Instruction Sheets

Instruction Sheet (U.S.)

English

Agency Approvals

UL

English