Integrated Driver and MOSFET

NCP302150

The NCP302150 integrates a MOSFET driver, high-side MOSFET and low-side MOSFET into a single package.

The driver and MOSFETs have been optimized for high-current DC-DC buck power conversion applications. The NCP302150 integrated solution greatly reduces package parasitics and board space compared to a discrete component solution.

Features

- Capable of Average Currents up to 50 A
- Capable of Switching at Frequencies up to 2 MHz
- Compatible with 3.3 V or 5 V PWM Input
- Responds Properly to 3-level PWM Inputs
- Option for Zero Cross Detection with 3-level PWM
- Internal Bootstrap Diode
- Undervoltage Lockout
- Supports Intel® Power State 4
- Thermal Warning Output
- Thermal Shutdown

Applications

- Notebook, Tablet PC and Ultrabook
- Servers and Workstations, V-Core and Non-V-Core DC-DC Converters
- Desktop and All-in-One Computers, V-Core and Non-V-Core DC-DC Converters
- High-Current DC-DC Point-of-Load Converters
- Small Form-Factor Voltage Regulator Modules

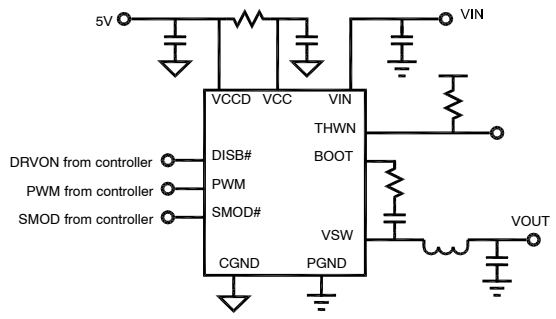

Figure 1. Application Schematic

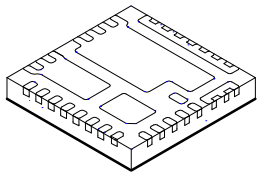

PQFN31 5X5, 0.5P
CASE 483BR

MARKING DIAGRAM



A = Assembly Location
WL = Wafer Lot
YY = Year
WW = Work Week

PINOUT DIAGRAM

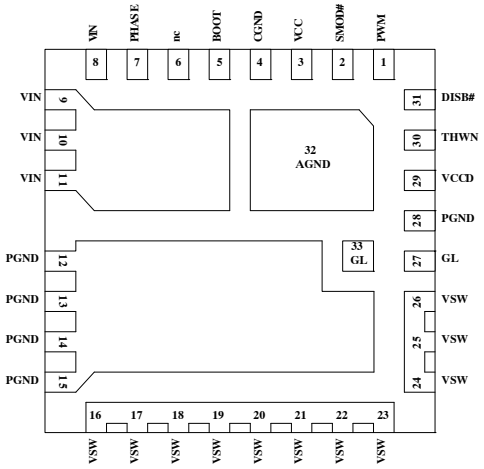

ORDERING INFORMATION

Device	Package	Shipping†
NCP302150MNTWG	PQFN31 5x5	3000 / Tape & Reel

† For information on tape and reel specifications, including part orientation and tape sizes, please refer to our Tape and Reel Packaging Specification Brochure, BRD8011/D.

© Semiconductor Components Industries, LLC, 2018

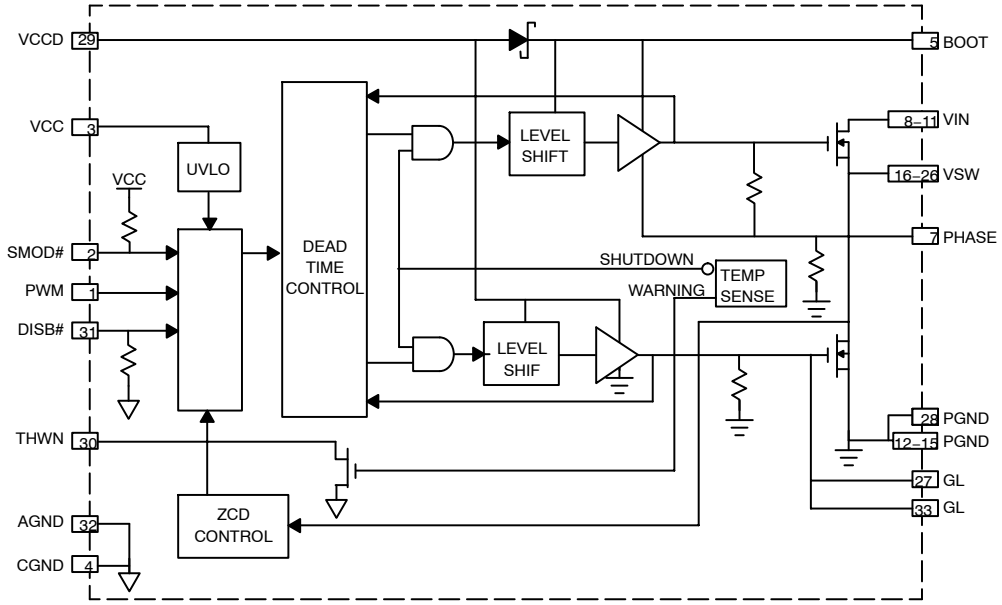

Figure 2. Block Diagram

Table 1. PIN LIST AND DESCRIPTION

Pin No.	Symbol	Description
1	PWM	PWM Control Input and Zero Current Detection Enable
2	SMOD#	Skip Mode pin. 3-state input (see Table 6): SMOD# = High → State of PWM determine whether the NCP302150 performs ZCD or not. SMOD# = Mid → Connects PWM to internal resistor divider placing a bias voltage on PWM pin. Otherwise, logic is equivalent to SMOD# in the high state. SMOD# = Low → Placing PWM into mid-state pulls GH and GL low without delay. There is an internal pull-up resistor to VCC on this pin.
3	VCC	Control Power Supply Input
4, 32	CGND, AGND	Signal Ground (pin 4 and pad 32 are internally connected)
5	BOOT	Bootstrap Voltage
6	nc	Open pin (not used)
7	PHASE	Bootstrap Capacitor Return
8–11	VIN	Conversion Supply Power Input
12–15, 28	PGND	Power Ground
16–26	VSW	Switch Node Output
27, 33	GL	Low Side FET Gate Access (pin 27 and pad 33 are internally connected)
29	VCCD	Driver Power Supply Input
30	THWN	Thermal warning indicator. This is an open-drain output. When the temperature at the driver die reaches T_{THWN}, this pin is pulled low.
31	DISB#	Output disable pin. When this pin is pulled to a logic high level, the driver is enabled. There is an internal pull-down resistor on this pin.

Table 2. ABSOLUTE MAXIMUM RATINGS (Electrical Information − all signals referenced to PGND unless noted otherwise)

Pin Name / Parameter	Min	Max	Unit
VCC, VCCD	−0.3	6.5	V
VIN	−0.3	30	V
VIN to PHASE (DC)	−0.3	30	V
VIN to PHASE (< 5 ns)	−3	35	V
BOOT (DC)	−0.3	35	V
BOOT (< 5 ns)	−9	40	V
BOOT to PHASE (DC)	−0.3	6.5	V
BOOT to PHASE (< 20 ns)	−0.3	9.0	V
VSW, PHASE (DC)	−0.3	30	V
VSW, PHASE (< 20 ns)	−5	35	V
PHASE (< 5 ns)	−15	35	V
All Other Pins	−0.3	V_{VCC} + 0.3	V

Stresses exceeding those listed in the Maximum Ratings table may damage the device. If any of these limits are exceeded, device functionality should not be assumed, damage may occur and reliability may be affected.

Table 3. THERMAL INFORMATION

Rating	Symbol	Value	Unit
Thermal Resistance (under **onsemi** SPS Thermal Board)	θ_{JA}	12.4	°C/W
	θ_{J-PCB}	1.8	°C/W
Operating Junction Temperature Range (Note 1)	T_J	−40 to +150	°C
Operating Ambient Temperature Range	T_A	−40 to +125	°C
Maximum Storage Temperature Range	T_{STG}	−55 to +150	°C
Maximum Power Dissipation		10.5	W
Moisture Sensitivity Level	MSL	1	

1. The maximum package power dissipation must be observed.
2. JESD 51-5 (1S2P Direct-Attach Method) with 0 LFM
3. JESD 51-7 (1S2P Direct-Attach Method) with 0 LFM

Table 4. RECOMMENDED OPERATING CONDITIONS

Parameter	Pin Name	Conditions	Min	Typ	Max	Unit
Supply Voltage Range	VCC, VCCD		4.5	5.0	5.5	V
Conversion Voltage	VIN		4.5	12	20	V
Continuous Output Current		F_{SW} = 1 MHz, V_{IN} = 12 V, V_{OUT} = 1.0 V, T_A = 25 °C			45	A
		F_{SW} = 300 kHz, V_{IN} = 12 V, V_{OUT} = 1.0 V, T_A = 25 °C			50	A
Peak Output Current		Duration = 5 μs, Period = 10 ms			85	A
Junction Temperature			−40		125	°C

Functional operation above the stresses listed in the Recommended Operating Ranges is not implied. Extended exposure to stresses beyond the Recommended Operating Ranges limits may affect device reliability.

Table 5. ELECTRICAL CHARACTERISTICS
(V_{VCC} = V_{VCCD} = 5.0 V, V_{VIN} = 12 V, $V_{DISB\#}$ = 2.0 V, C_{VCCD} = C_{VCC} = 0.1 μF unless specified otherwise) Min/Max values are valid for the temperature range −40 °C ≤ T_J ≤ 125 °C unless noted otherwise, and are guaranteed by test, design or statistical correlation.)

Parameter	Symbol	Conditions	Min	Typ	Max	Unit
VCC SUPPLY CURRENT						
Operating		DISB# = 5 V, PWM = 400 kHz	–	1	2	mA
No switching		DISB# = 5 V, PWM = 0 V	–	–	2	mA
Disabled		DISB# = 0 V, SMOD# = VCC	–	0.4	1	μA
		DISB# = 0 V, SMOD# = GND		6	13	μA
UVLO Start Threshold	V_{UVLO}	VCC rising	2.89	–	3.37	V
UVLO Hysteresis			150	–	–	mV
VCCD SUPPLY CURRENT						
Enabled, No switching		DISB# = 5 V, PWM = 0 V, V_{PHASED} = 0 V	–	175	300	μA
Disabled		DISB# = 0 V	–	0.4	1	μA
Operating		DISB# = 5 V, PWM = 400 kHz	–	–	20	mA
DISB# INPUT						
Input Resistance		DISB# = 5 V, PWM = 400 kHz	–	467	–	kΩ
Upper Threshold	V_{UPPER}	DISB# = 5 V, PWM = 0 V	–	–	2.0	V
Lower Threshold	V_{LOWER}	DISB# = 5 V, PWM = 0 V	0.8	–	–	V
Hysteresis		DISB# = 5 V, PWM = 400 kHz	200	–	–	mV
Enable Delay Time		DISB# = 5 V, PWM = 0 V	–	–	40	μs
Disable Delay Time		DISB# = 5 V, PWM = 0 V	–	21	50	ns
SMOD# INPUT						
SMOD# Input Voltage High	V_{SMOD_HI}		2.65	–	–	V
SMOD# Input Voltage Mid-state	$V_{SMOD\#_MID}$		1.4	–	2.0	V
SMOD# Input Voltage Low	V_{SMOD_LO}		–	–	0.7	V
SMOD# Input Resistance	$R_{SMOD\#_UP}$	Pull-up resistance to VCC	–	455	–	kΩ
SMOD# Propagation Delay, Falling	$T_{SMOD\#_PD_F}$	SMOD# = Low to GL = 90%, PWM = MID	–	34	42	ns
SMOD# Propagation Delay, Rising	$T_{SMOD\#_PD_R}$	SMOD# = High to GL = 10%, PWM = MID	–	22	30	ns
PWM INPUT						
Input Voltage High	V_{PWM_HI}		2.65	–	–	V
Input Mid-state Voltage	V_{PWM_MID}		1.4	–	2.0	V
Input Low Voltage	V_{PWM_LO}		–	–	0.7	V
Input Resistance	R_{PWM_HIZ}	SMOD# = $V_{SMOD\#_HI}$ or $V_{SMOD\#_LO}$	10	–	–	MΩ
Input Resistance	R_{PWM_BIAS}	SMOD# = $V_{SMOD\#_MID}$	–	68	–	kΩ
PWM Input Bias Voltage	V_{PWM_BIAS}	SMOD# = $V_{SMOD\#_MID}$	–	1.7	–	V
Non-overlap Delay, Leading Edge	T_{NOL_L}	GL Falling = 1 V to GH−VSW Rising = 1 V	–	13	–	ns
Non-overlap Delay, Trailing Edge	T_{NOL_T}	GH−VSW Falling = 1 V to GL Rising = 1 V	–	12	–	ns
PWM Propagation Delay, Rising	T_{PWM,PD_R}	PWM = High to GL = 90%	–	13	35	ns
PWM Propagation Delay, Falling	T_{PWM,PD_F}	PWM = Low to SW = 90%	–	47	52	ns

Table 5. ELECTRICAL CHARACTERISTICS (continued)
(V_{VCC} = V_{VCCD} = 5.0 V, V_{VIN} = 12 V, $V_{DISB\#}$ = 2.0 V, C_{VCCD} = C_{VCC} = 0.1 μF unless specified otherwise) Min/Max values are valid for the temperature range −40 °C ≤ T_J ≤ 125 °C unless noted otherwise, and are guaranteed by test, design or statistical correlation.)

Parameter	Symbol	Conditions	Min	Typ	Max	Unit
Exiting PWM Mid-state Propagation Delay, Mid-to-Low	$T_{PWM_EXIT_L}$	PWM = Mid-to-Low to GL = 10%	–	14	25	ns
Exiting PWM Mid-state Propagation Delay, Mid-to-High	$T_{PWM_EXIT_H}$	PWM = Mid-to-High to SW = 10%	–	13	25	ns
ZD FUNCTION						
Zero Cross Detect Threshold	V_{ZCD}		–	−6	–	mV
ZCD Blanking + Debounce Time	t_{BLNK}		–	330	–	ns
THERMAL WARNING & SHUTDOWN						
Thermal Warning Temperature	T_{THWN}	Temperature at Driver Die	–	150	–	°C
Thermal Warning Hysteresis	T_{THWN_HYS}		–	15	–	°C
Thermal Shutdown Temperature	T_{THDN}	Temperature at Driver Die	–	180	–	°C
Thermal Shutdown Hysteresis	T_{THDN_HYS}		–	25	–	°C
THWM Open Drain Current	I_{THWN}		–	–	5	mA
BOOSTSTRAP DIODE						
Forward Voltage		Forward Bias Current = 2.0 mA	–	380	–	mV
HIGH-SIDE DRIVER						
Output Impedance, Sourcing	R_{SOURCE_GH}	Source Current = 100 mA	–	0.9	–	Ω
Output Sourcing Peak Current	I_{SOURCE_GH}		–	2	–	A
Output Impedance, Sinking	R_{SINK_GH}	Sink Current = 100 mA	–	0.7	–	Ω
Output Sinking Peak Current	I_{SINK_GH}		–	2.5	–	A
LOW-SIDE DRIVER						
Output Impedance, Sourcing	R_{SOURCE_GL}	Source Current = 100 mA	–	0.9	–	Ω
Output Sourcing Peak Current	I_{SOURCE_GL}	GL = 2.5 V	–	2	–	A
Output Impedance, Sinking	R_{SINK_GL}	Sink Current = 100 mA	–	0.4	–	Ω
Output Sinking Peak Current	I_{SINK_GL}	GL = 2.5 V	–	4.5	–	A
GL Rise Time	T_{R_GL}	GL = 10% to 90%, C_{LOAD} = 3.0 nF	–	12	–	ns
GL Fall Time	T_{F_GL}	GL = 90% to 10%, C_{LOAD} = 3.0 nF	–	6	–	ns

Product parametric performance is indicated in the Electrical Characteristics for the listed test conditions, unless otherwise noted. Product performance may not be indicated by the Electrical Characteristics if operated under different conditions.

Table 6. LOGIC TABLE

INPUT TRUTH TABLE				
DISB#	**PWM**	**SMOD# (Note 4)**	**GH (not a pin)**	**GL**
L	X	X	L	L
H	H	X	H	L
H	L	X	L	H
H	MID	H or MID	L	ZCD (Note 5)
H	MID	L	L	L (Note 6)

4. PWM input is driven to mid-state with internal divider resistors when SMOD# is driven to mid-state and PWM input is undriven externally.
5. GL goes low following 80 ns de-bounce time, 250 ns blanking time and then SW exceeding ZCD threshold.
6. There is no delay before GL goes low.

TYPICAL PERFORMANCE CHARACTERISTICS

Test Conditions: V_{IN} = 12 V, V_{CC} = V_{CCD} = 5 V, V_{OUT} = 1 V, L_{OUT} = 250 nH, T_A = 25 °C and natural convection cooling, unless otherwise noted.

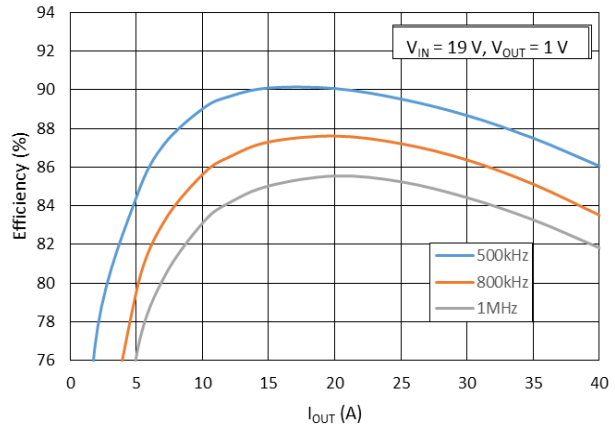

Figure 3. Efficiency – 19 V Input, 1.0 V Output

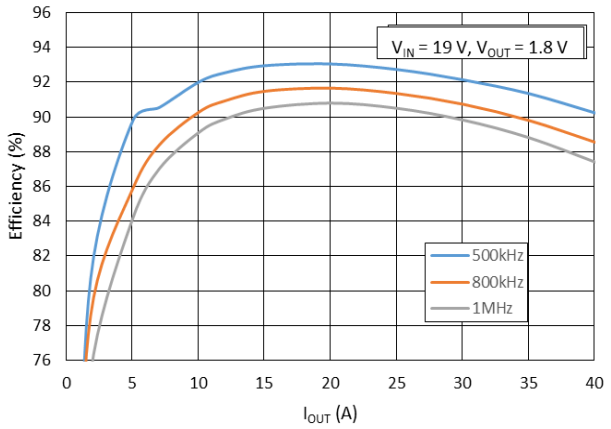

Figure 4. Efficiency – 19 V Input, 1.8 V Output

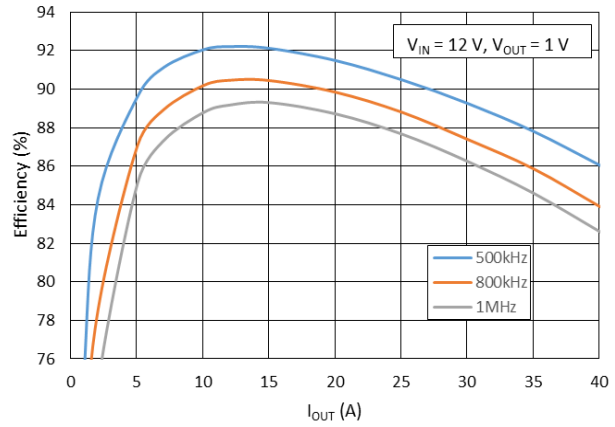

Figure 5. Efficiency – 12 V Input, 1.0 V Output

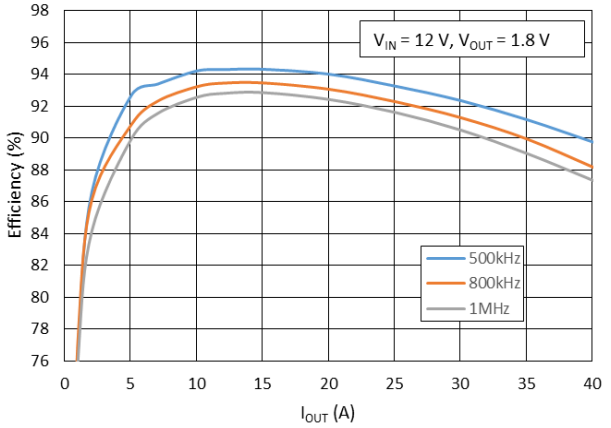

Figure 6. Efficiency – 12 V Input, 1.8 V Output

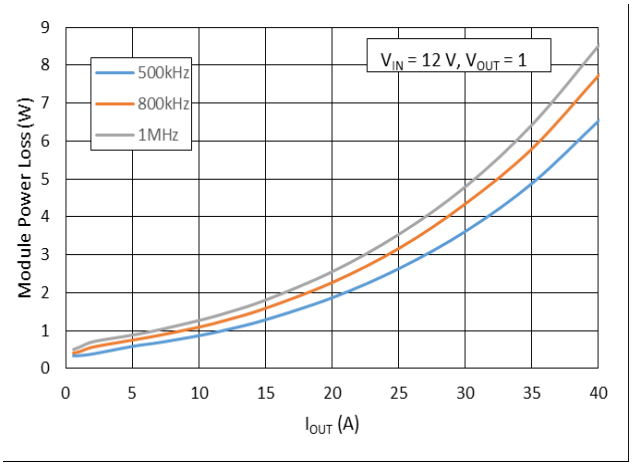

Figure 7. Power losses vs. Output Current, 12Vin

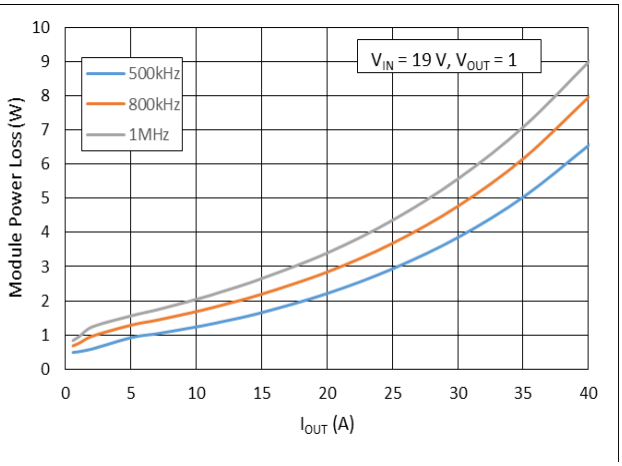

Figure 8. Power losses vs. Output Current, 19Vin

TYPICAL PERFORMANCE CHARACTERISTICS

Test Conditions: V_{IN} = 12 V, V_{CC} = PV_{CC} = 5 V, V_{OUT} = 1 V, L_{OUT} = 250 nH, T_A = 25 °C and natural convection cooling, unless otherwise noted.

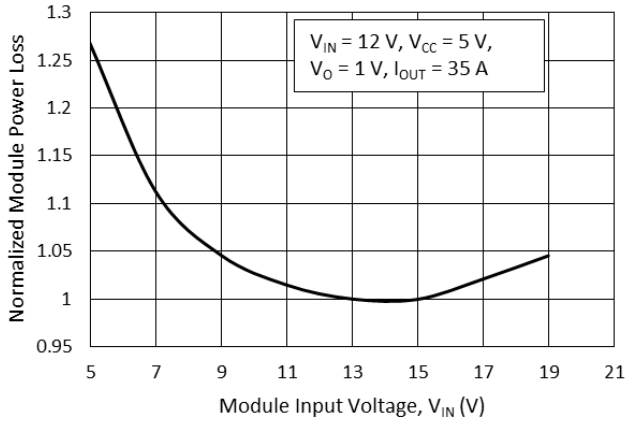

Figure 9. Power Loss vs. Switching Frequency

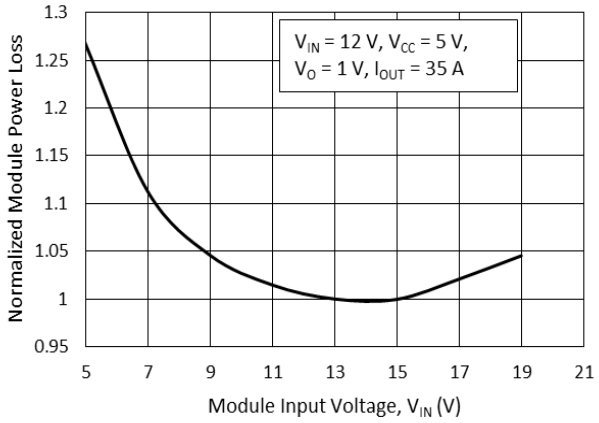

Figure 10. Power Loss vs. Input Voltage

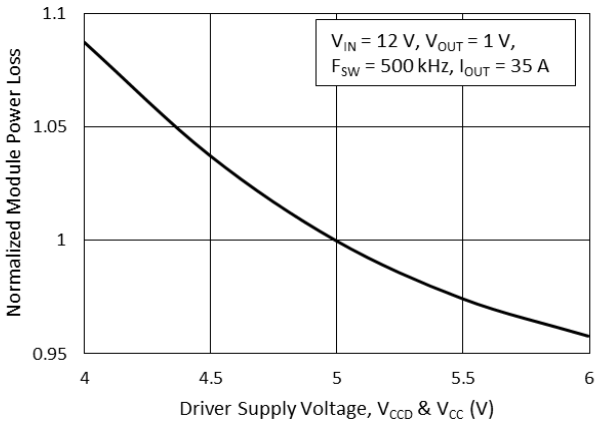

Figure 11. Power Loss vs. Driver Supply Voltage

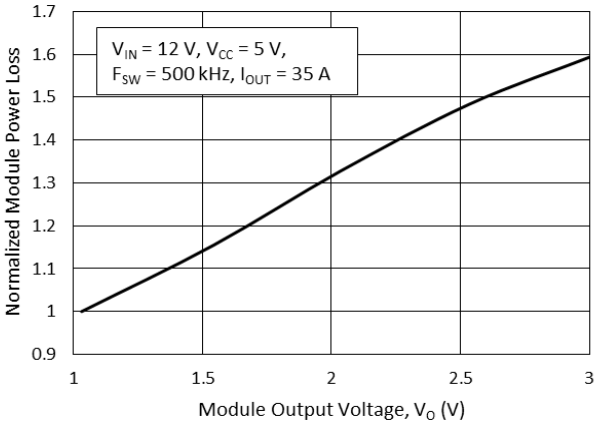

Figure 12. Power Loss vs. Output Voltage

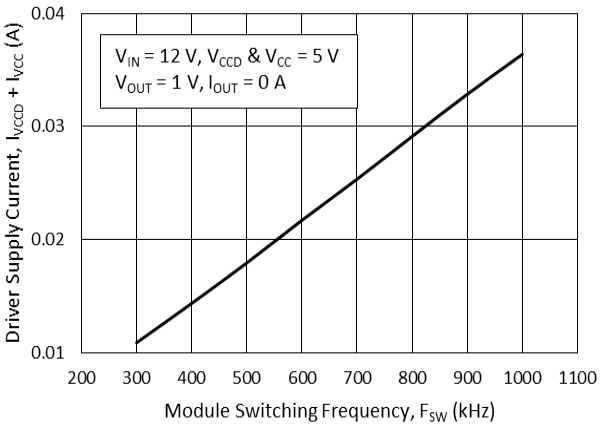

Figure 13. Driver Supply Current vs. Switching Frequency

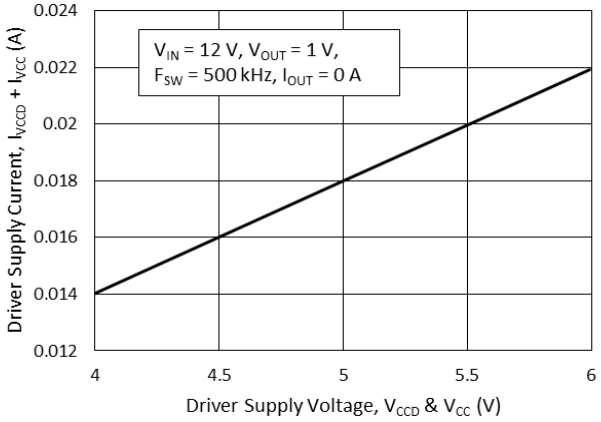

Figure 14. Driver Supply Current vs. Driver Supply Voltage

Theory of Operation

The NCP302150 is an integrated driver and MOSFET module designed for use in a synchronous buck converter topology. The NCP302150 supports numerous application control definitions including ZCD (Zero Current Detect) and alternately PWM Tristate control. A PWM input signal is required to control the drive signals to the high-side and low-side integrated MOSFETs.

Low-Side Driver

The low-side driver drives an internal, ground-referenced low-R_{DS}(on) N-Channel MOSFET. The voltage supply for the low-side driver is internally connected to the VCCD and PGND pins.

High-Side Driver

The high-side driver drives an internal, floating low-R_{DS}(on) N-channel MOSFET. The gate voltage for the high side driver is developed by a bootstrap circuit referenced to Switch Node (VSW and PHASE) pins.

The bootstrap circuit is comprised of the integrated diode and an external bootstrap capacitor and resistor. When the NCP302150 is starting up, the VSW pin is at ground, allowing the bootstrap capacitor to charge up to VCCD through the bootstrap diode (See Figure 1). When the PWM input is driven high, the high-side driver turns on the high-side MOSFET using the stored charge of the bootstrap capacitor. As the high-side MOSFET turns on, the voltage at the VSW and PHASE pins rises. When the high-side MOSFET is fully turned on, the switch node settles to VIN and the BST pin settles to VIN + VCCD (excluding parasitic ringing).

Bootstrap Circuit

The bootstrap circuit relies on an external charge storage capacitor (C_{BST}) and an integrated diode to provide current to the HS Driver. A multi-layer ceramic capacitor (MLCC) with a value greater than 100 nF should be used as the bootstrap capacitor. An optional 1 to 4 Ω resistor in series with the bootstrap capacitor decreases the VSW overshoot.

Power Supply Decoupling

The NCP302150 sources relatively large currents into the MOSFET gates. In order to maintain a constant and stable supply voltage (VCCD) a low-ESR capacitor should be placed near the power and ground pins. A multi-layer ceramic capacitor (MLCC) between 1 μF and 4.7 μF is typically used.

A separate supply pin (VCC) is used to power the analog and digital circuits within the driver. A 1 μF ceramic capacitor should be placed on this pin in close proximity to the NCP302150. It is good practice to separate the VCC and VCCD decoupling capacitors with a resistor (10 Ω typical) to avoid coupling driver noise to the analog and digital circuits that control the driver function (See Figure 1).

Safety Timer and Overlap Protection Circuit

It is important to avoid cross-conduction of the two MOSFETS which could result in a decrease in the power conversion efficiency or damage to the device.

The NCP302150 prevents cross-conduction by monitoring the status of the MOSFETs and applying the appropriate amount of non-overlap (NOL) time (the time between the turn-off of one MOSFET and the turn-on of the other MOSFET). When the PWM input pin is driven high, the gate of the low-side MOSFET (LSGATE) goes low after a propagation delay (tpdlGL). The time it takes for the low-side MOSFET to turn off is dependent on the total charge on the low-side MOSFET gate.

The NCP302150 monitors the gate voltage of both MOSFETs and the switch node voltage to determine the conduction status of the MOSFETs. Once the low-side MOSFET is turned off an internal timer delays (tpdhGH) the turn-on of the high-side MOSFET. When the PWM input pin goes low, the gate of the high-side MOSFET (HSGATE) goes low after the propagation delay (tpdlGH). The time to turn off the high-side MOSFET (tfGH) is dependent on the total gate charge of the high-side MOSFET. A timer is triggered once the high-side MOSFET stops conducting, to delay (tpdhGL) the turn-on of the low-side MOSFET.

Zero Current Detect

The Zero Current Detect PWM (ZCD_PWM) mode is enabled when SMOD# is high (see Tables 6 and 8).

With PWM set to > VPWM_HI, GL goes low and GH goes high after the non-overlap delay. When PWM is driven to < VPWM_HI and to > VPWM_LO, GL goes high after the non-overlap delay, and stays high for the duration of the ZCD blanking timer (T_{ZCD_BLANK}) and an 80 ns de-bounce timer. Once this timer expires, VSW is monitored for zero current detection, and GL is pulled low once zero current is detected. The threshold on VSW to determine zero current undergoes an auto-calibration cycle every time DISB# is brought from low to high. This auto-calibration cycle typically takes 25 μs to complete.

PWM Input

The PWM Input pin is a tri-state input used to control the HS MOSFET ON/OFF state. It also determines the state of the LS MOSFET. See Table 6 for logic operation. The PWM in some cases must operate with frequency programming resistances to ground. These resistances can range from 10 kΩ to 300 kΩ depending on the application. When SMOD# is set to > VSMOD#_HI or to < VSMOD#_LO, the input impedance to the PWM input is very high in order to avoid interferences with controllers that must use programming resistances on the PWM pin.

If SMOD# is set to < VSMOD#_HI and > VSMOD#_LO (Mid-State), the PWM pin undriven default voltage is set to Mid-State with internal divider resistances.

Disable Input (DISB#)

The DISB# pin is used to disable the GH to the High-Side FET to prevent power transfer. The pin has a pull-down resistance to force a disabled state when it is left unconnected. DISB# can be driven from the output of a logic device or set high with a pull-up resistance to VCC.

VCC Undervoltage Lockout

The VCC pin is monitored by an Undervoltage Lockout Circuit (UVLO). VCC voltage above the rising threshold enables the NCP302150.

Table 7. UVLO/DISB# LOGIC TABLE

UVLO	DISB#	Driver State
L	X	Disabled (GH = GL = 0)
H	L	Disabled (GH = GL = 0)
H	H	Enabled (See Table 1)
H	Open	Disabled (GH = GL = 0)

Thermal Warning/Thermal Shutdown Output

The THWN pin is an open drain output. When the temperature of the driver exceeds T_{THWN}, the THWN pin is pulled low indicating a thermal warning. At this point, the part continues to function normally. When the temperature drops T_{THWN_HYS} below T_{THWN}, the THWN pin goes high. If the driver temperature exceeds T_{THDN}, the part enters thermal shutdown and turns off both MOSFETs. Once the temperature falls T_{THDN_HYS} below T_{THDN}, the part resumes normal operation.

Skip Mode Input (SMOD#)

The SMOD# tri-state input pin has an internal pull-up resistance to VCC. When driven high, the SMOD# pin enables the low side synchronous MOSFET to operate independently of the internal ZCD function. When the SMOD# pin is set low during the PWM cycle it disables the low side MOSFET to allow discontinuous mode operation.

The NCP302150 has the capability of internally connecting a resistor divider to the PWM pin. To engage this mode, SMOD# needs to be placed into mid-state. While in SMOD# mid-state, the IC logic is equivalent to SMOD# being in the high state.

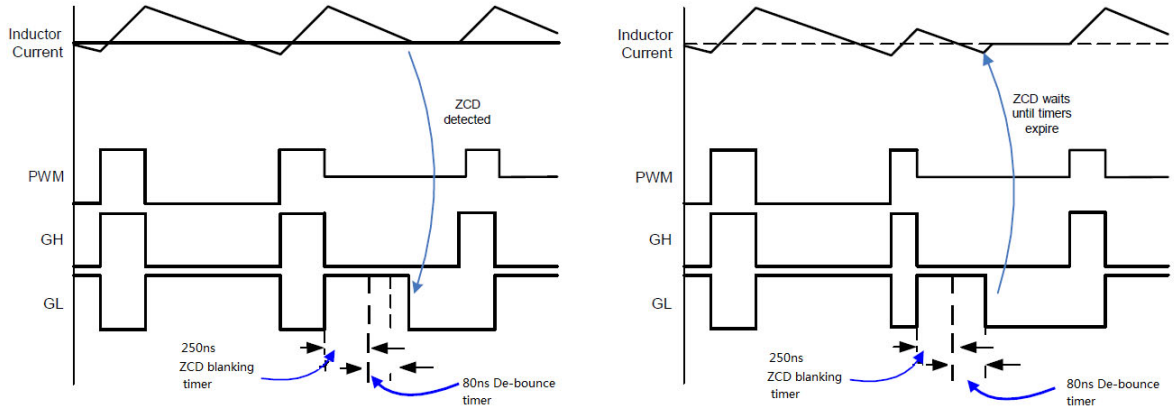

NOTE: If the Zero Current Detect circuit detects zero current after the ZCD Wait timer period, the GL is driven low by the Zero Current Detect signal.
If the Zero Current Detect circuit detects zero current before the ZCD Wait timer period expires, the Zero Current detect signal is ignored and the GL is driven low at the end of the ZCD Wait timer period.

NOTE: If the SMOD# input is driven low at any time after the GL has been driven high, the SMOD# Falling edge triggers the GL to go low.
If the SMOD# input is driven low while the GH is high, the SMOD# input is ignored.

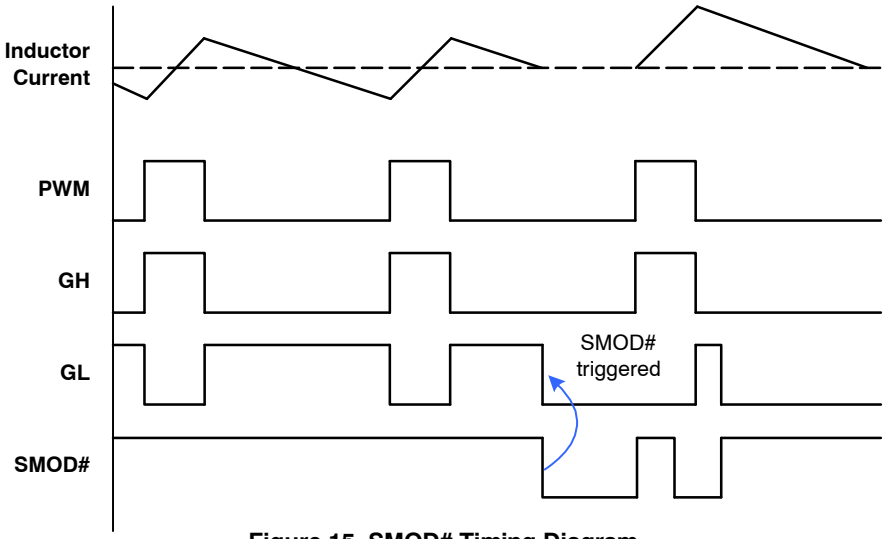

Figure 15. SMOD# Timing Diagram

NOTE: If the SMOD# input is driven low at any time after the GL has been driven high, the SMOD# Falling edge triggers the GL to go low.
If the SMOD# input is driven low while the GH is high, the SMOD# input is ignored.

FOR USE WITH CONTROLLERS WITH 3-STATE PWM CONTROLLERS DETECTION CAPABILITY

Table 8. LOGIC TABLE – 3-STATE PWM CONTROLLERS WITH NO ZCD

PWM	SMOD#	GH (not a pin)	GL
H	H	ON	OFF
M	H	OFF	ZCD
L	H	OFF	ON

This section describes operation with controllers that are capable of three states in their PWM output and relies on the NCP302150 to conduct zero current detection during discontinuous conduction mode (DCM).

The SMOD# pin needs to either be set to 5 V or left disconnected. The NCP302150 has an internal pull-up resistor that connects to VCC that sets SMOD# to the logic high state if this pin is disconnected.

To operate the buck converter in continuous conduction mode (CCM), PWM needs to switch between the logic high and low states. To enter into DCM, PWM needs to be switched to the mid-state.

Whenever PWM transitions to mid-state, GH turns off and GL turns on. GL stays on for the duration of the de-bounce timer and ZCD blanking timers. Once these timers expire, the NCP302150 monitors the SW voltage and turns GL off when SW exceeds the ZCD threshold voltage. By turning off the LS FET, the body diode of the LS FET allows any positive current to go to zero but prevents negative current from conducting.

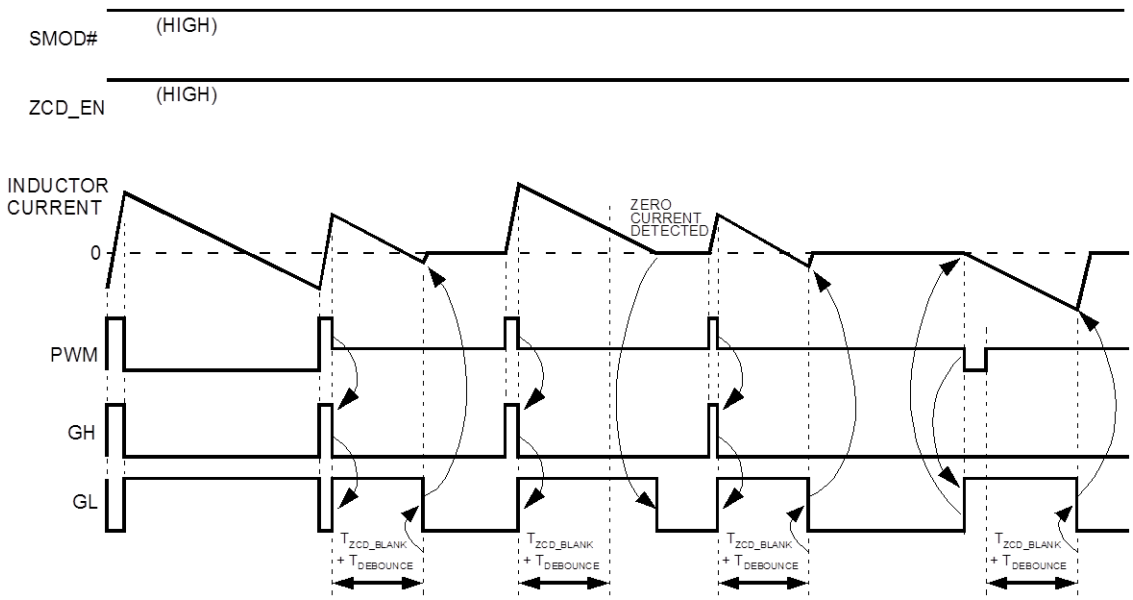

Figure 16. Timing Diagram − 3-state PWM Controller, No ZCD

FOR USE WITH CONTROLLERS WITH 3-STATE PWM CONTROLLERS DETECTION CAPABILITY:

Table 9. LOGIC TABLE − 3-STATE PWM CONTROLLERS WITH ZCD

PWM	SMOD#	GH (not a pin)	GL
H	L	ON	OFF
M	L	OFF	OFF
L	L	OFF	ON

This section describes operation with controllers that are capable of three PWM output levels and have zero current detection during discontinuous conduction mode (DCM).

The SMOD# pin needs to be pulled low (below $V_{SMOD\#_LO}$).

To operate the buck converter in continuous conduction mode (CCM), PWM needs to switch between the logic high and low states. During DCM, the controller is responsible for detecting when zero current has occurred, and then notifying the NCP302150 to turn off the LS FET. When the controller detects zero current, it needs to set PWM to mid-state, which causes the NCP302150 to pull both GH and GL to their off states without delay.

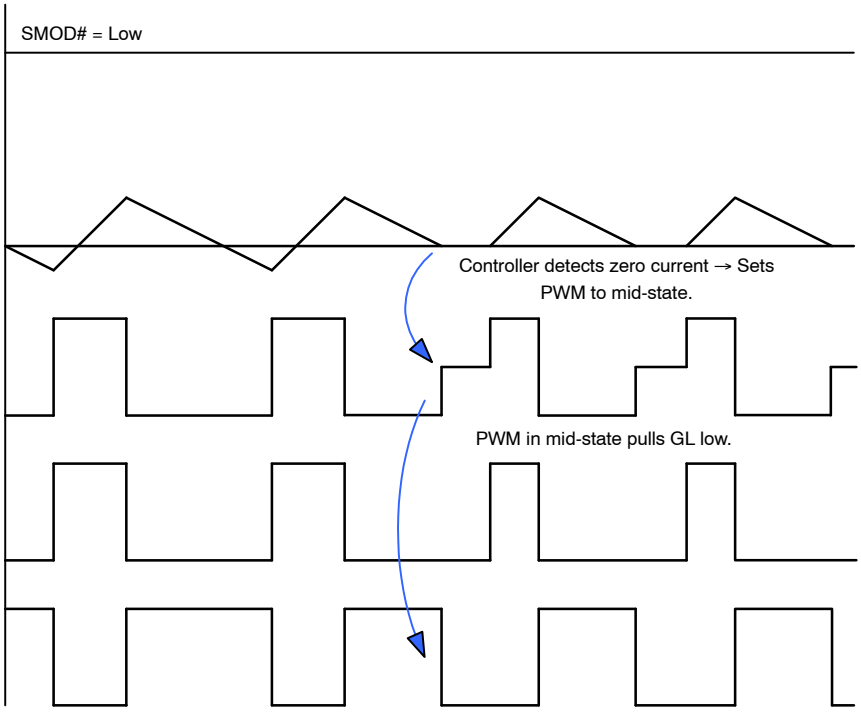

Figure 17. Timing Diagram – 3-state PWM Controller, with ZCD

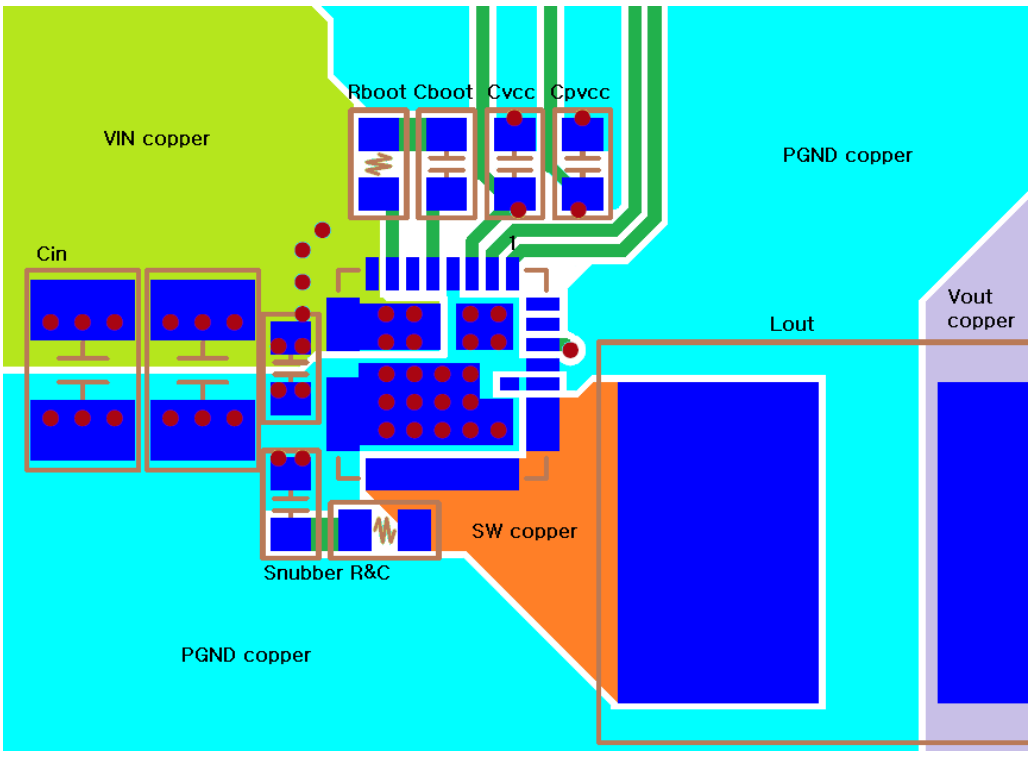

Figure 18. Top Copper Layer

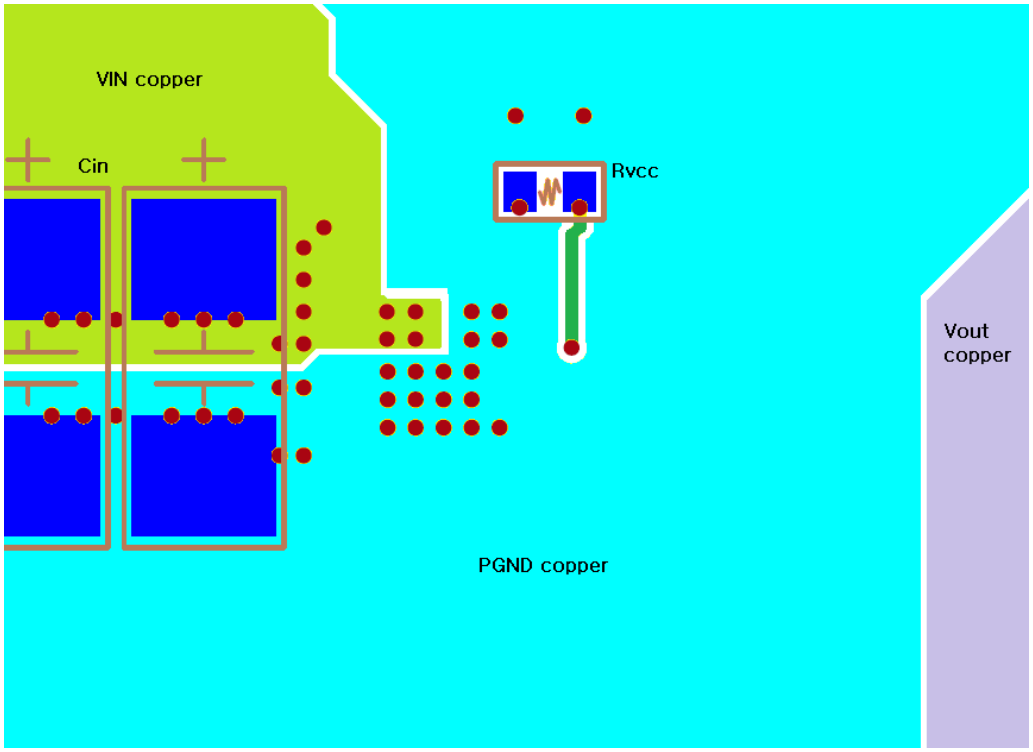

Figure 19. Bottom Copper Layer

RECOMMENDED PCB FOOTPRINT

(Option 1)

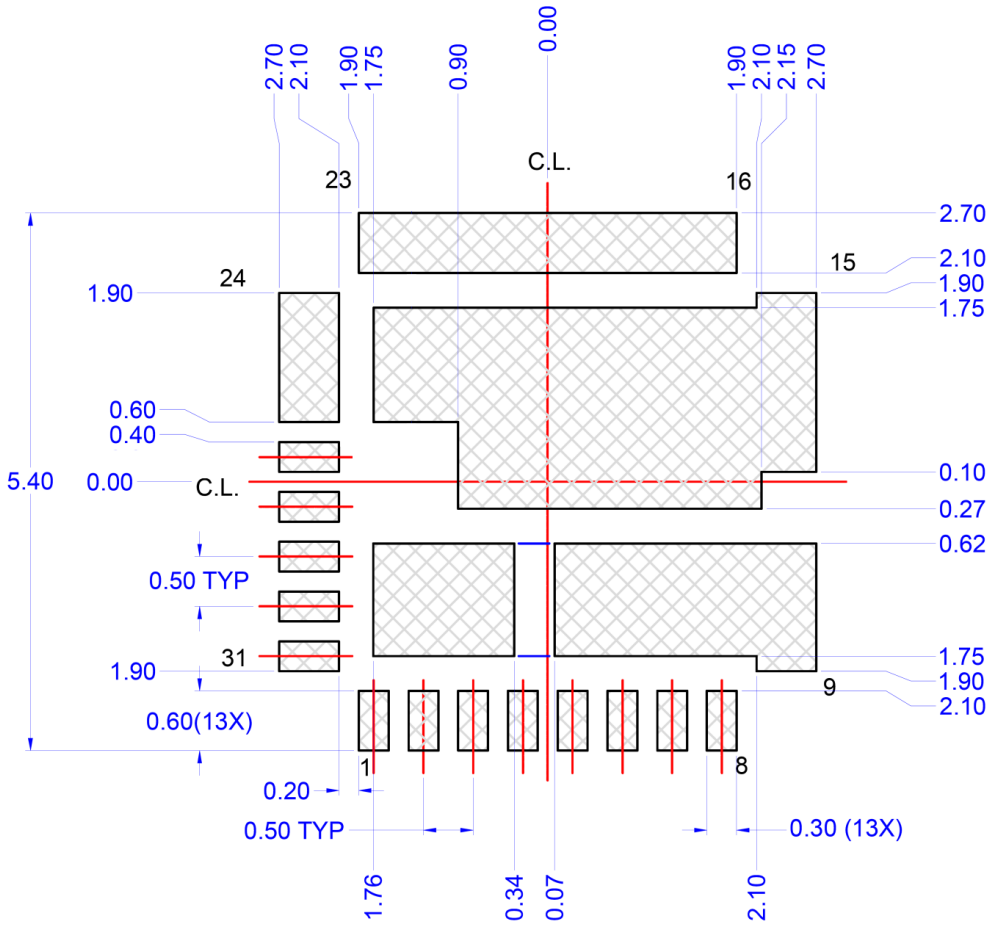

LAND PATTERN RECOMMENDATION

RECOMMENDED MOUNTING FOOTPRINT

For additional information on our Pb-Free strategy and soldering details, please download the **onsemi** Soldering and Mounting Techniques Reference Manual, SOLDERRM/D.

RECOMMENDED PCB FOOTPRINT
(Option 2)

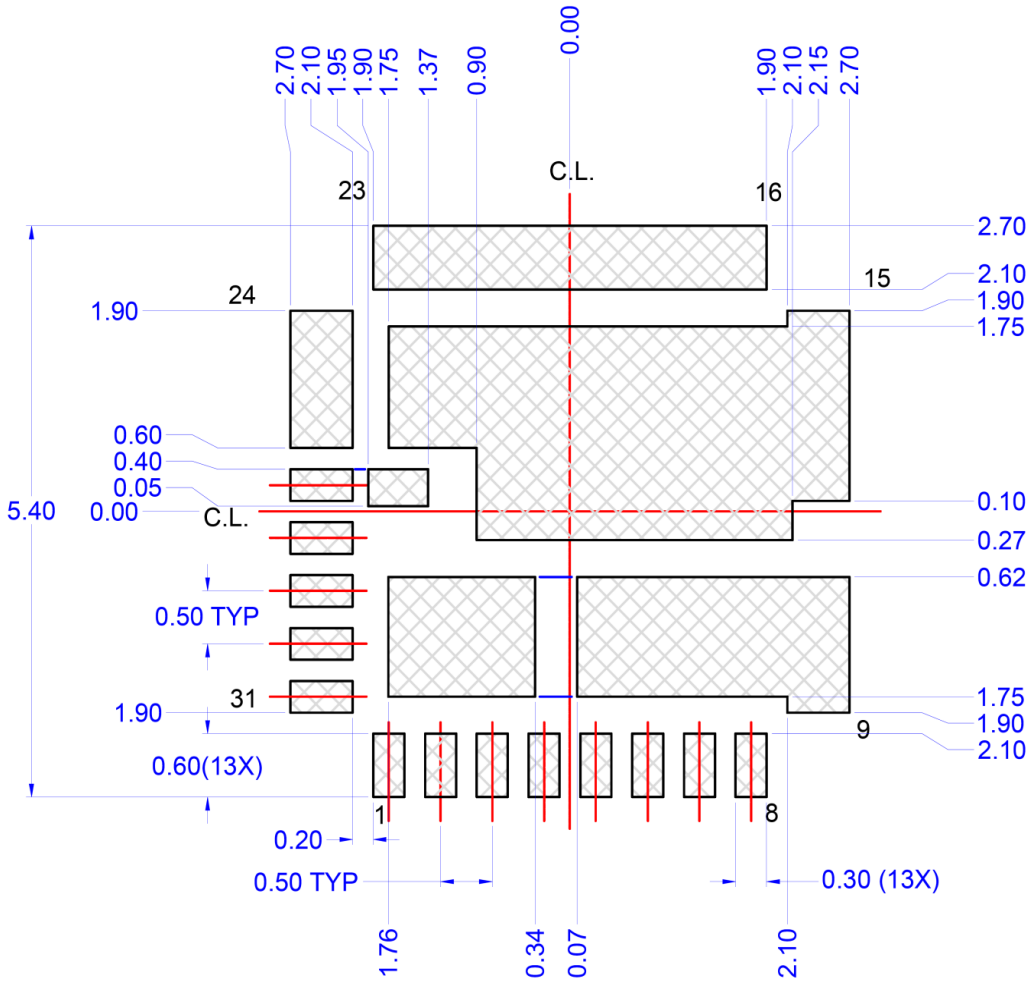

LAND PATTERN RECOMMENDATION

RECOMMENDED MOUNTING FOOTPRINT

For additional information on our Pb-Free strategy and soldering details, please download the **onsemi** Soldering and Mounting Techniques Reference Manual, SOLDERRM/D.

Intel is a registered trademark of Intel Corporation in the U.S. And/or other countries.

REVISION HISTORY

Revision	Description of Changes	Date
8	Change three values in the max ratings table.	07/18/2025

This document has undergone updates prior to the inclusion of this revision history table. The changes tracked here only reflect updates made on the noted approval dates.

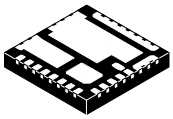

SCALE 2.5:1

PQFN31 5X5, 0.5P
CASE 483BR
ISSUE D

DATE 13 FEB 2023

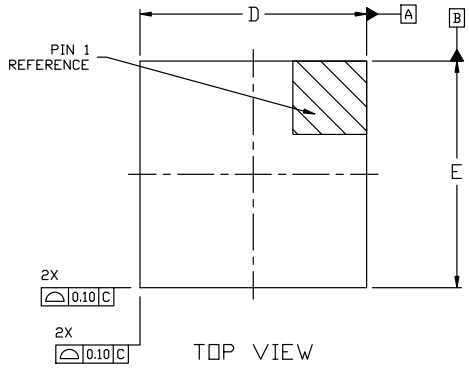

NOTES:

1. DOES NOT FULLY CONFORM TO JEDEC REGISTRATION MO-220, DATES MAY/2005.
2. DIMENSIONING AND TOLERANCING PER ASME Y14.5, 2009.
3. CONTROLLING DIMENSION: MILLIMETERS
4. DIMENSIONS DO NOT INCLUDE BURRS AND SMEAR OR MOLD FLASH.
   MOLD FLASH OR BURRS AND SMEAR DO NOT EXCEED 0.10MM.
5. DIMENSION b AND B1 APPLIES TO PLATED TERMINAL AND IS MEASURED BETWEEN 0.15 AND 0.30 FROM THE TERMINAL TIP.

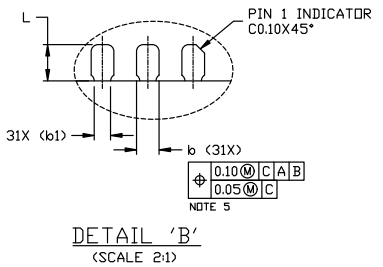

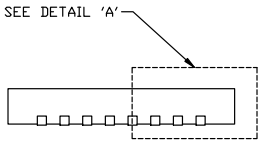

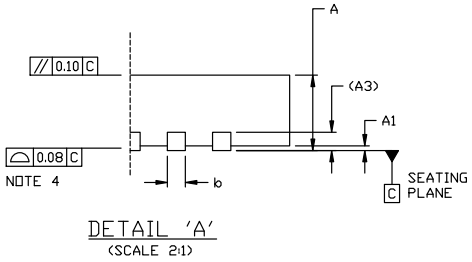

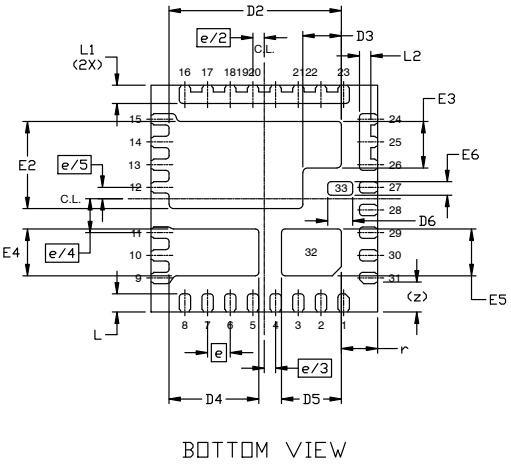

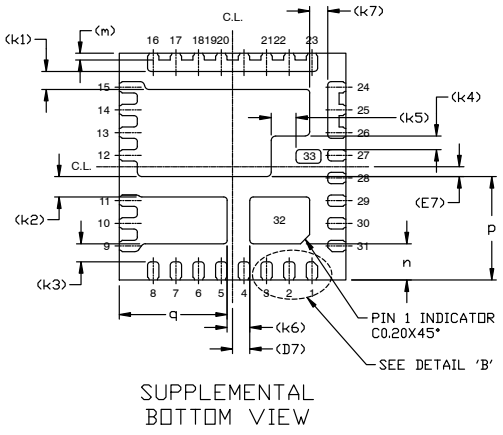

DIM	MILLIMETERS		
	MIN.	NOM.	MAX.
A	0.70	0.75	0.80
A1	0.00	–	0.05
A3	0.15	0.20	0.25
b	0.20	0.25	0.30
b1	0.13	0.18	0.30
D	4.90	5.00	5.10
D2	3.70	3.80	3.90
D3	0.75	0.85	0.95
D4	1.88	1.98	2.08
D5	1.22	1.32	1.42
D6	0.45	0.55	0.65
D7	0.38 REF		
E	4.90	5.00	5.10
E2	1.82	1.92	2.02
E3	0.93	1.03	1.13
E4	0.93	1.03	1.13
E5	0.93	1.03	1.13
E6	0.20	0.30	0.40
E7	0.22 REF		
e	0.50 BSC		
e/2	0.25 BSC		
e/3	0.25 BSC		
e/4	0.75 BSC		
e/5	0.25 BSC		
k1	0.40 REF		
k2	0.45 REF		
k3	0.40 REF		
k4	0.30 REF		
k5	0.55 REF		
k6	0.50 REF		
k7	0.40 REF		
L	0.30	0.40	0.50
L1	0.30	0.40	0.50
L2	0.15	0.25	0.35
m	0.15 REF		
n	0.80 REF		
p	2.28 REF		
q	2.38 REF		
r	0.80 REF		
z	0.625 REF		

onsemi and onsemi are trademarks of Semiconductor Components Industries, LLC dba **onsemi** or its subsidiaries in the United States and/or other countries. **onsemi** reserves the right to make changes without further notice to any products herein. **onsemi** makes no warranty, representation or guarantee regarding the suitability of its products for any particular purpose, nor does **onsemi** assume any liability arising out of the application or use of any product or circuit, and specifically disclaims any and all liability, including without limitation special, consequential or incidental damages. **onsemi** does not convey any license under its patent rights nor the rights of others.

© Semiconductor Components Industries, LLC, 2018

PQFN31 5X5, 0.5P
CASE 483BR
ISSUE D

DATE 13 FEB 2023

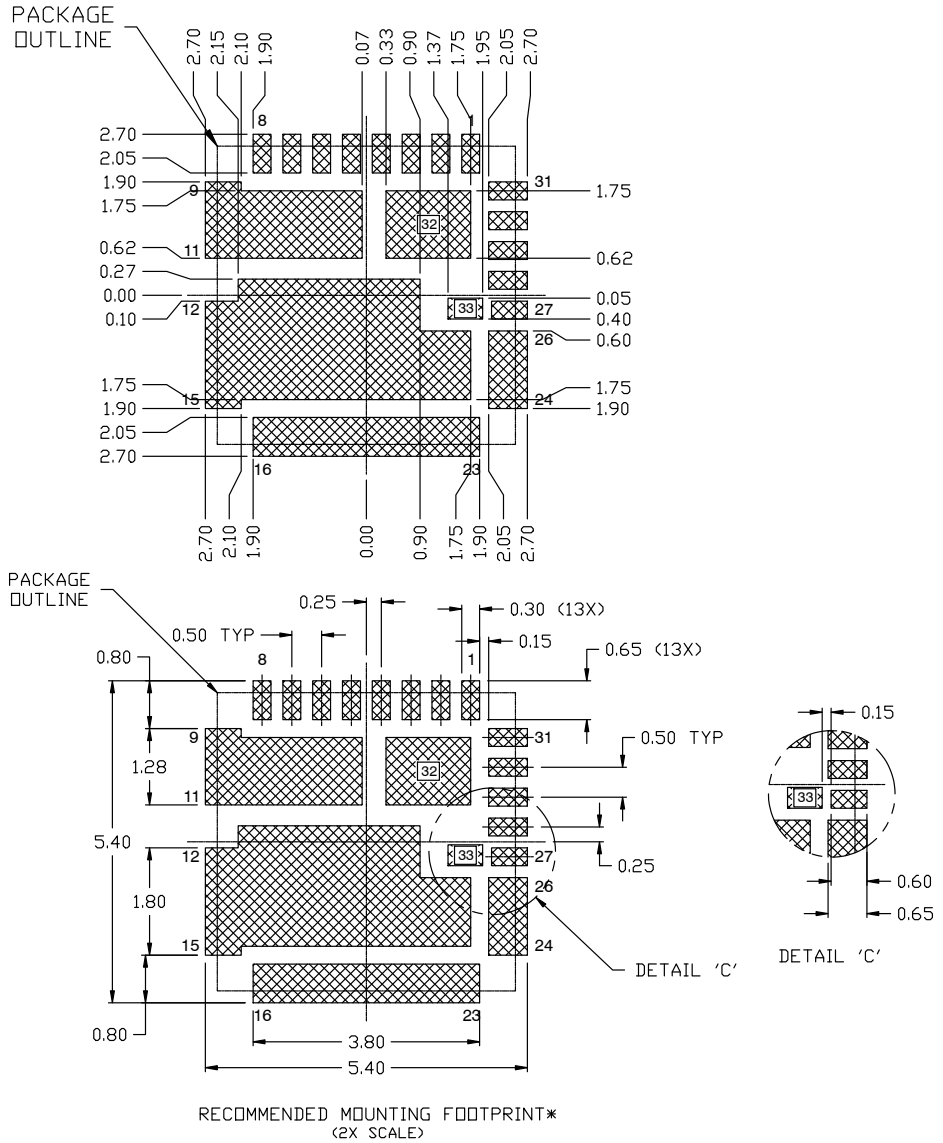

* For additional information on our Pb-Free strategy and soldering details, please download the ONSEMI Soldering and Mounting Techniques Reference Manual, SOLDERRM/D.

GENERIC MARKING DIAGRAM*

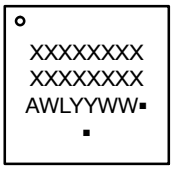

XXXX = Specific Device Code
A = Assembly Location
WL = Wafer Lot
YY = Year
WW = Work Week
▪ = Pb−Free Package

(Note: Microdot may be in either location)

*This information is generic. Please refer to device data sheet for actual part marking. Pb−Free indicator, "G" or microdot "▪", may or may not be present. Some products may not follow the Generic Marking.

DOCUMENT NUMBER:	**98AON13680G**	Electronic versions are uncontrolled except when accessed directly from the Document Repository. Printed versions are uncontrolled except when stamped "CONTROLLED COPY" in red.	
DESCRIPTION:	**PQFN31 5X5, 0.5P**		**PAGE 2 OF 2**

onsemi and ONSEMI are trademarks of Semiconductor Components Industries, LLC dba **onsemi** or its subsidiaries in the United States and/or other countries. **onsemi** reserves the right to make changes without further notice to any products herein. **onsemi** makes no warranty, representation or guarantee regarding the suitability of its products for any particular purpose, nor does **onsemi** assume any liability arising out of the application or use of any product or circuit, and specifically disclaims any and all liability, including without limitation special, consequential or incidental damages. **onsemi** does not convey any license under its patent rights nor the rights of others.

© Semiconductor Components Industries, LLC, 2018

onsemi, , and other names, marks, and brands are registered and/or common law trademarks of Semiconductor Components Industries, LLC dba "**onsemi**" or its affiliates and/or subsidiaries in the United States and/or other countries. **onsemi** owns the rights to a number of patents, trademarks, copyrights, trade secrets, and other intellectual property. A listing of **onsemi**'s product/patent coverage may be accessed at www.onsemi.com/site/pdf/Patent−Marking.pdf. **onsemi** reserves the right to make changes at any time to any products or information herein, without notice. The information herein is provided "as−is" and **onsemi** makes no warranty, representation or guarantee regarding the accuracy of the information, product features, availability, functionality, or suitability of its products for any particular purpose, nor does **onsemi** assume any liability arising out of the application or use of any product or circuit, and specifically disclaims any and all liability, including without limitation special, consequential or incidental damages. Buyer is responsible for its products and applications using **onsemi** products, including compliance with all laws, regulations and safety requirements or standards, regardless of any support or applications information provided by **onsemi**. "Typical" parameters which may be provided in **onsemi** data sheets and/or specifications can and do vary in different applications and actual performance may vary over time. All operating parameters, including "Typicals" must be validated for each customer application by customer's technical experts. **onsemi** does not convey any license under any of its intellectual property rights nor the rights of others. **onsemi** products are not designed, intended, or authorized for use as a critical component in life support systems or any FDA Class 3 medical devices or medical devices with a same or similar classification in a foreign jurisdiction or any devices intended for implantation in the human body. Should Buyer purchase or use **onsemi** products for any such unintended or unauthorized application, Buyer shall indemnify and hold **onsemi** and its officers, employees, subsidiaries, affiliates, and distributors harmless against all claims, costs, damages, and expenses, and reasonable attorney fees arising out of, directly or indirectly, any claim of personal injury or death associated with such unintended or unauthorized use, even if such claim alleges that **onsemi** was negligent regarding the design or manufacture of the part. **onsemi** is an Equal Opportunity/Affirmative Action Employer. This literature is subject to all applicable copyright laws and is not for resale in any manner.

ADDITIONAL INFORMATION

TECHNICAL PUBLICATIONS:
Technical Library: www.onsemi.com/design/resources/technical−documentation
onsemi Website: www.onsemi.com

ONLINE SUPPORT: www.onsemi.com/support
For additional information, please contact your local Sales Representative at www.onsemi.com/support/sales