1-170823-9 ✔ ACTIVE

FASTON | FASTON 250

TE Internal #: 1-170823-9

Crimp Terminal Housings, Receptacle, Receptacle, 1 Position, Straight, UL 94V-2, Natural, Soft PVC, -40 - 105 °C [-40 - 221 °F], FASTON 250

View on TE.com >

Terminals & Splices > Terminal Housings, Insulation Sleeves & Blocks > Crimp Terminal Housings

Terminal Type: **Receptacle**

Connector & Housing Type: **Receptacle**

Number of Positions: **1**

Terminal Orientation: **Straight**

UL Flammability Rating: **UL 94V-2**

Features

Product Type Features

Sealable	No
Connector & Housing Type	Receptacle

Configuration Features

Number of Positions	1

Body Features

Primary Product Color	Natural

Contact Features

Terminal Type	Receptacle
Terminal Orientation	Straight
Contact Mating Retention	Without

Mechanical Attachment

Mating Alignment	Without

Housing Features

Housing Material	Soft PVC

Dimensions

Product Length	35.5 mm[1.39 in]
Compatible Insulation Diameter Range	1.8 mm[.071 in]

Usage Conditions

Operating Temperature Range	-40 - 105 °C[-40 - 221 °F]

Industry Standards

UL Flammability Rating	UL 94V-2

Product Compliance

For compliance documentation, visit the product page on TE.com>

EU RoHS Directive 2011/65/EU	Compliant
EU ELV Directive 2000/53/EC	Compliant
China RoHS 2 Directive MIIT Order No 32, 2016	No Restricted Materials Above Threshold
EU REACH Regulation (EC) No. 1907/2006	Current ECHA Candidate List: JAN 2024 (240) Candidate List Declared Against: JAN 2024 (240) SVHC > Threshold: Dioctyltin dilaurate derivs (.3% in Component Part)
Halogen Content	Not Low Halogen - contains Br or Cl > 900 ppm.
Solder Process Capability	Not applicable for solder process capability

Product Compliance Disclaimer

This information is provided based on reasonable inquiry of our suppliers and represents our current actual knowledge based on the information they provided. This information is subject to change. The part numbers that TE has identified as EU RoHS compliant have a maximum concentration of 0.1% by weight in homogenous materials for lead, hexavalent chromium, mercury, PBB, PBDE, DBP, BBP, DEHP, DIBP, and 0.01% for cadmium, or qualify for an exemption to these limits as defined in the Annexes of Directive 2011/65/EU (RoHS2). Finished electrical and electronic equipment products will be CE marked as required by Directive 2011/65/EU. Components may not be CE marked. Additionally, the part numbers that TE has identified as EU ELV compliant have a maximum concentration of 0.1% by weight in homogenous materials for lead, hexavalent chromium, and mercury, and 0.01% for cadmium, or qualify for an exemption to these limits as defined in the Annexes of Directive 2000/53/EC (ELV). Regarding the REACH Regulation, the information TE provides on SVHC in articles for this part number is based on the latest European Chemicals Agency (ECHA) 'Guidance on requirements for substances in articles' posted at this URL: https://echa.europa.eu/guidance-documents/guidance-on-reach

Compatible Parts

TE Part # 170823-1
110 FASTON SLEEVE,TAB, TRANSPARENT,NAT



TE Part # 170891-2
250 FASTON HSG.,FLAG,REC., NATRUAL



TE Part # 170823-4
250 FASTON SLEEVE,REC., TRANSPARENT



TE Part # 1-170823-4
187 FASTON SLEEVE,REC., TRANSPARENT,NAT



TE Part # 1-170823-5
250 FASTON SLEEVE,REC., TRANSPARENT



TE Part # 170823-3
250 FASTON SLEEVE,REC., TRANSPARENT



TE Part # 170823-2
250 FASTON SLEEVE,REC., TRANSPARENT



TE Part # 170891-1
250 FASTON HSG.,FLAG,REC., NATRUAL



TE Part # 170823-6
250 FASTON SLEEVE,REC., TRANSPARENT



TE Part # 170892-4
187 FASTON HSG.,REC.,NATRUAL



TE Part # 170892-1
187 FASTON HSG.,REC.,NATRUAL



TE Part # 1-170823-6
250 FASTON SLEEVE,REC., TRANSPARENT



TE Part # 1-170823-1
110 FASTON SLEEVE,REC., TRANSPARENT,NAT



TE Part # 1-170823-3
187 FASTON SLEEVE,REC., TRANSPARENT,NAT



TE Part # 1-170823-8
250 FASTON SLEEVE,REC., TRANSPARENT

TE Part # 170823-9
110 FASTON SLEEVE,REC., TRANSPARENT,NAT



TE Part # 170889-4
SLEEVE DIA5 SHUR PLUG NAT



TE Part # 170892-2
187 FASTON HSG.,REC.,NATRUAL



TE Part # 2-170823-8
187 FASTON SLEEVE,FLAG,REC., TRANSPARENT



TE Part # 4-170823-1
205 FASTON SLEEVE,REC.,NATRUAL

Also in the Series | FASTON 250



Compression Connectors(4)



Crimp Terminal Housings(133)



Insertion & Extraction Tools(6)



Magnet Wire Terminals(1)



PCB Terminals(134)

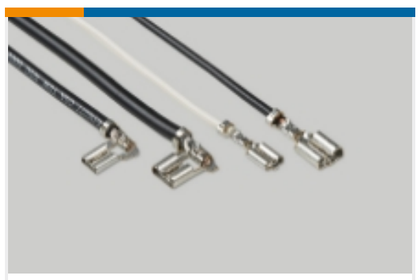

Quick Disconnects(441)



Splices(4)

Customers Also Bought

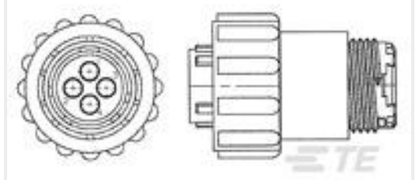

TE Part # 796274-1
SLD CPC PLUG ASSY,17-16,STD SX



TE Part # 282190-1
Timer Connector Housing



TE Part # 1473712-1
SUPER SEAL 2ROW 26POS PLUG ASS



TE Part # 180984-5
FASTON 250 BOOT FLAG NYLON BLK



TE Part # 2822388-1
.070 ECONOSEAL-J MARK 2+ PLUG ASSY 1P

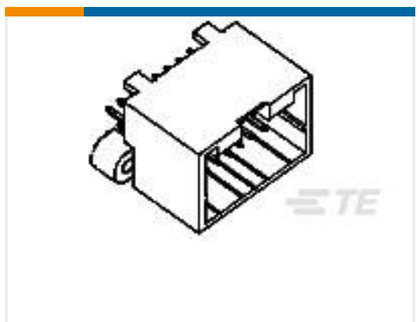

TE Part # 174977-2
040 MLC CAP ASSY V 20P

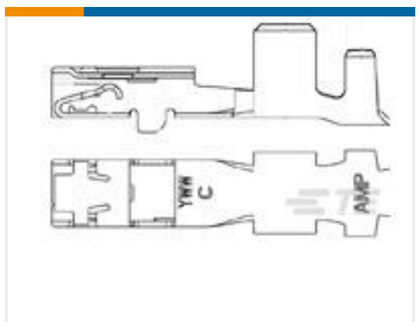

TE Part # 1326030-7
2.8MM RECP,UNSEAL,14-16AWG,REV



TE Part # CR6142-000
ES2000-NO.1-C1-0-70MM

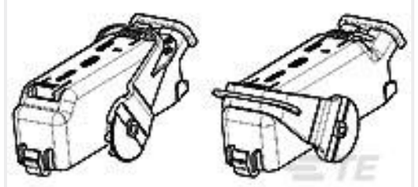

TE Part # 1379209-2
26W COVER ASSEMBLY

Documents

Product Drawings

250 FASTON SLEEVE,REC.,TRANSPARENT,NAT

English

CAD Files

3D PDF

3D

Customer View Model

ENG_CVM_CVM_1-170823-9_F.2d_dxf.zip

English

Customer View Model

ENG_CVM_CVM_1-170823-9_F.3d_igs.zip

English

Customer View Model

ENG_CVM_CVM_1-170823-9_F.3d_stp.zip

English

By downloading the CAD file I accept and agree to the Terms and Conditionsof use.

Datasheets & Catalog Pages

FASTON Housings

English