CUDEVICES

SERIES: SR11 | **DESCRIPTION:** SIGNALRELAY

FEATURES

- 3~24 Vdc coil voltage
- 200 mW coil power
- contact form 2C

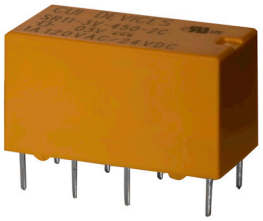

MODEL

	coil voltage typ (Vdc)	coil resistance (Ω±10%)	operating voltage min (Vdc)	release voltage max (Vdc)	coil power typ (mW)
SR11-3V-200-2C	3	45.0	2.25	0.3	200
SR11-5V-200-2C	5	125	3.75	0.5	200
SR11-9V-200-2C	9	405	6.75	0.9	200
SR11-12V-200-2C	12	720	9.0	1.2	200
SR11-24V-200-2C	24	2,880	18.0	2.4	200

Notes: 1. All specifications are measured at 23°C unless otherwise specified.

PART NUMBER KEY

SR11 - XX - 200 - 2C

Base Number

Coil Voltage (Vdc):
3V = 3
5V = 5
9V = 9
12V = 12
24V = 24

CONTACT SPECIFICATIONS

parameter	conditions/description	min	typ	max	units
contact form	2 Form C				
contact material	AuAg overlay				
contact rating	1 A @ 120 Vac, 24 Vdc				
contact resistance	at 6 Vdc, 0.1 A			50	mΩ
max switching voltage				125 30	Vac Vdc
max switching current				2	A
max switching power				240 48	VA W
min switching load	5 Vdc, 10 mA				
life	electrical mechanical		100,000 15,000,000		operations operations

GENERAL SPECIFICATIONS

parameter	conditions/description	min	typ	max	units
insulation resistance	at 500 Vdc	1,000			MΩ
dielectric strength	between open contacts for 1 minute between coil and contacts for 1 minute		500 1,000		Vac Vac
operate time				7	ms
release time				3	ms
shock resistance	endurance misoperation		1,000 100		m/s^2 m/s^2
vibration resistance	endurance: 10~55 Hz, 1.5 mm double amplitude misoperation: 10~55 Hz, 1.5 mm double amplitude				
operating temperature		-25		70	°C
humidity	at 40°C	35		95	%RH
weight			5.0		g
safety approvals	UL/cUL 508				
flammability rating	UL94V-0				
RoHS	yes				
packaging	tube: 25 pcs per tube carton size: 584 x 310 x 134 mm carton QTY: 2,000 pcs per carton				

SOLDERABILITY

parameter	conditions/description	min	typ	max	units
hand soldering	for 3.5±0.5 seconds	340	350	360	°C
wave soldering	for 10±1 seconds	255	260	265	°C

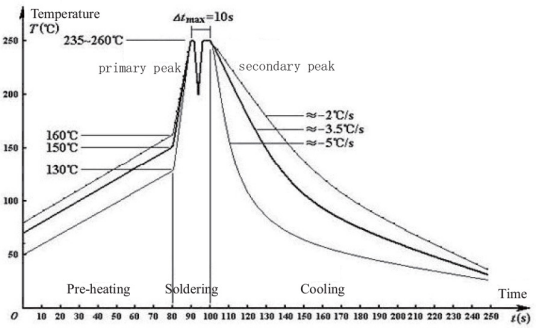

Double-wave Soldering Curve

MECHANICAL DRAWING

units: mm
tolerance: ±0.3 mm
unless otherwise noted

ITEM	DESCRIPTION	MATERIAL	PLATING/COLOR
A	housing	PBT (UL94V-0)	orange
B	terminals	copper covered steel	tin

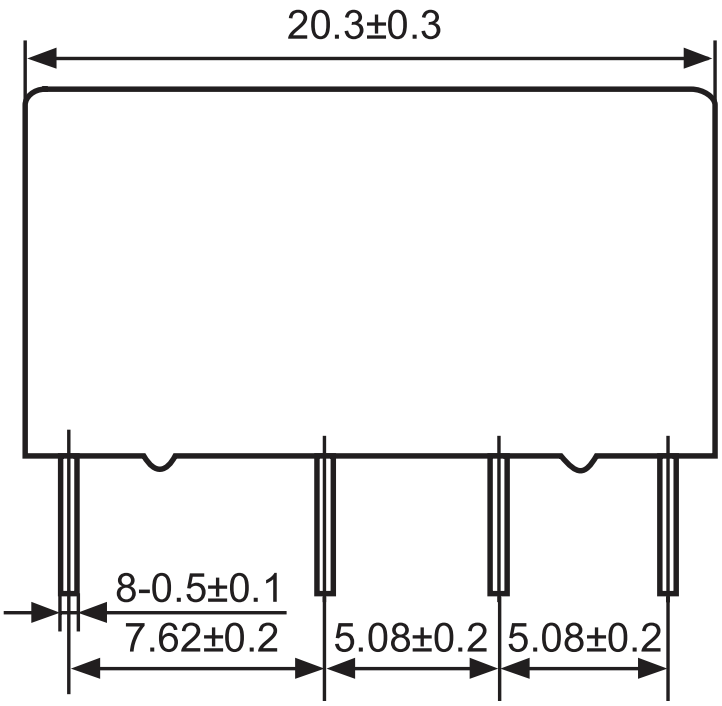

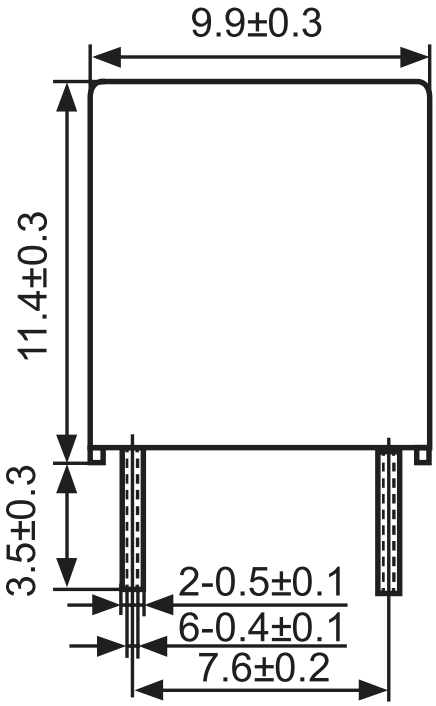

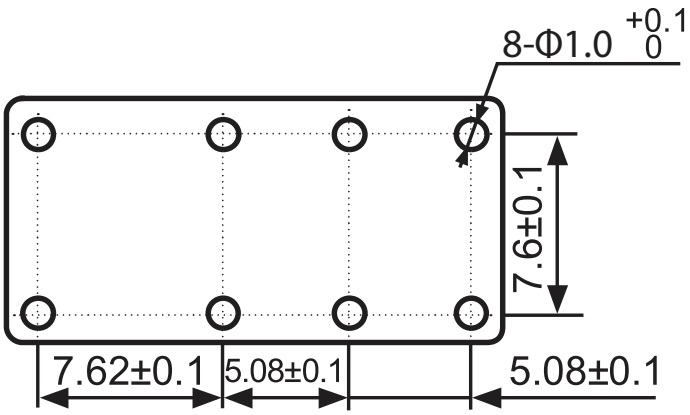

Recommended PCB Layout
Bottom View

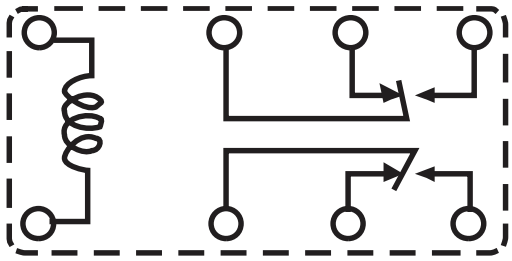

Wiring Diagram
Bottom View

CHARACTERISTIC CURVES

Time Curve

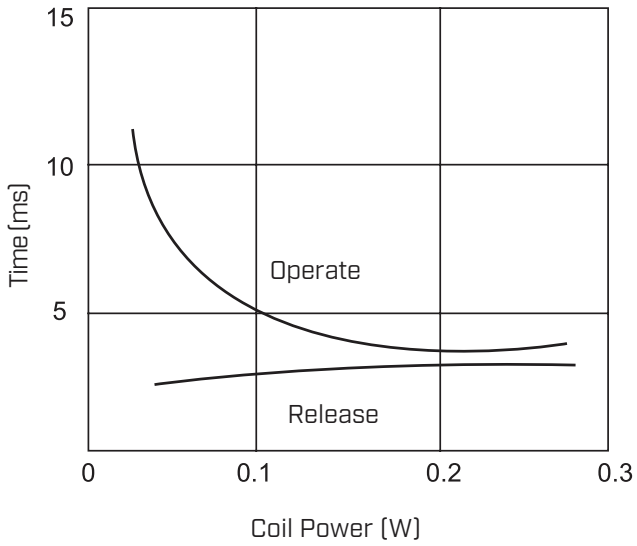

Coil Temperature Rise

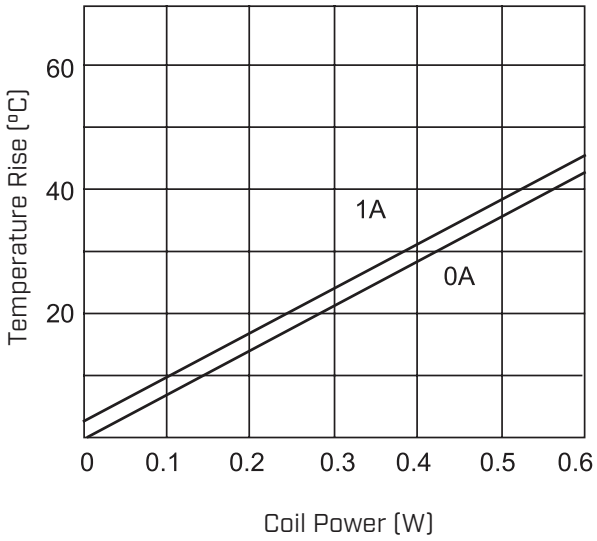

Life Curve

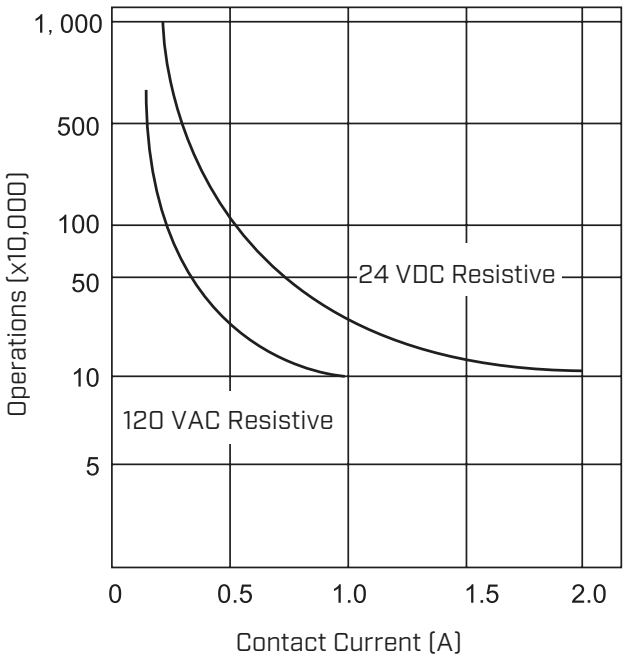

Maximum Switching Power

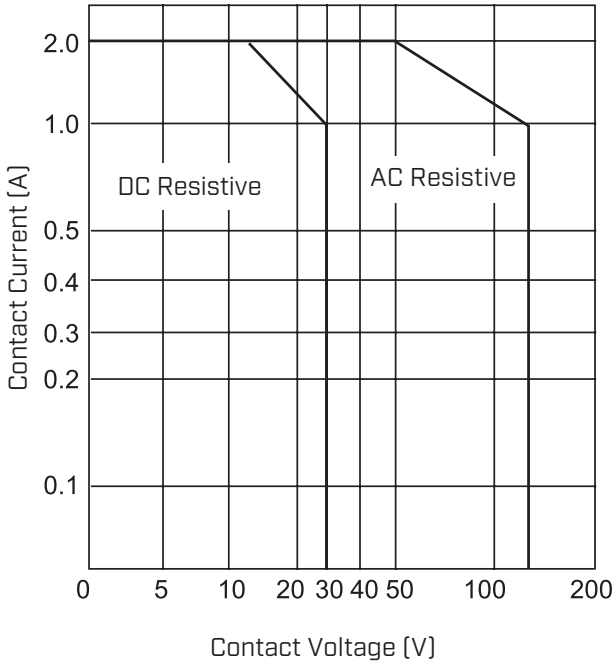

REVISION HISTORY

rev.	description	date
1.0	initial release	06/07/2022
1.01	logo, datasheet style update	10/28/2022

The revision history provided is for informational purposes only and is believed to be accurate.

CUI Devices offers a one (1) year limited warranty. Complete warranty information is listed on our website.

CUI Devices reserves the right to make changes to the product at any time without notice. Information provided by CUI Devices is believed to be accurate and reliable. However, no responsibility is assumed by CUI Devices for its use, nor for any infringements of patents or other rights of third parties which may result from its use.

CUI Devices products are not authorized or warranted for use as critical components in equipment that requires an extremely high level of reliability. A critical component is any component of a life support device or system whose failure to perform can be reasonably expected to cause the failure of the life support device or system, or to affect its safety or effectiveness.

cuidevices.com