TMC 83D 35A - Miniature Circuit Breaker

1010290

https://www.phoenixcontact.com/us/products/1010290

Please be informed that the data shown in this PDF document is generated from our online catalog. Please find the complete data in the user documentation. Our general terms of use for downloads are valid.



Thermal-magnetic Miniature Circuit Breaker, 3-position, use: Branch Circuit Protection (UL 489), for protection against overload with a breaking capacity of 10 kA, tripping characteristic: D, mounting type: NS 35/..., rated current: 35 A

Your advantages

- Can be used worldwide due to international approvals
- Suitable for various grid types, as it is available in 1-, 2-, 3-pos. versions
- Ideally coordinated protection due to various tripping characteristics and a wide selection of nominal currents
- Reduced inventory because of suitability for AC and DC applications
- Optional accessories enable remote control and monitoring

Commercial data

Item number	1010290
Packing unit	1 pc
Minimum order quantity	1 pc
Sales key	CL08
Product key	CLA125
GTIN	4055626482590
Weight per piece (including packing)	222.222 g
Weight per piece (excluding packing)	222.222 g
Customs tariff number	85362010
Country of origin	CN

Technical data

Product properties

Product type	Circuit breakers
Product family	TMC 8
Type	DIN rail module, one-piece
Number of positions	3
Mechanical service life	20000
Special properties	Branch Circuit Protection (UL 489), for protection against overload with a breaking capacity of 10 kA Thermal-magnetic

Electrical properties

Service life electrical	6000

General

Operating voltage	240 V AC (Delta)
Rated current I_N	35 A
Tripping method	TM (thermal-magnetic)
Rated short-circuit switching capacity I_{cn}	10 kA (IC)
Fuse	D
Contact switching type	none

Connection data

Conductor cross-section rigid	1 mm² ... 35 mm²
Cross section AWG	18 ... 2 (converted acc. to IEC)
Conductor cross-section flexible	1 mm² ... 35 mm²
Connection method	Screw connection
Tightening torque, min	2 Nm
Stripping length	11 mm ... 12 mm
Conductor cross-section flexible max.	35 mm²
Conductor cross-section, rigid max.	35 mm²

Dimensions

Dimensional drawing	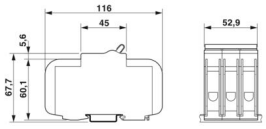
Width	52.9 mm
Height	116 mm
Depth	76.6 mm (incl. DIN rail 7.5 mm)

Material specifications

Color	light gray (RAL 7035)

Environmental and real-life conditions

Ambient conditions

Ambient temperature (operation)	-35 °C ... 70 °C
Humidity test	48 h, 95% RH, 40°C (IEC 60068-2-78)
Shock (operation)	30g (11 ms) (IEC 60068-2-11)
Vibration (operation)	±0.38 mm (10 Hz ... 57 Hz), 5g (57 Hz ... 500 Hz) (IEC 60068-2-6, Fc, sine)

Standards and regulations

Standards/specifications	UL 489
Standards/specifications	IEC 60947-2

Mounting

Mounting type	NS 35/...

Drawings

Dimensional drawing

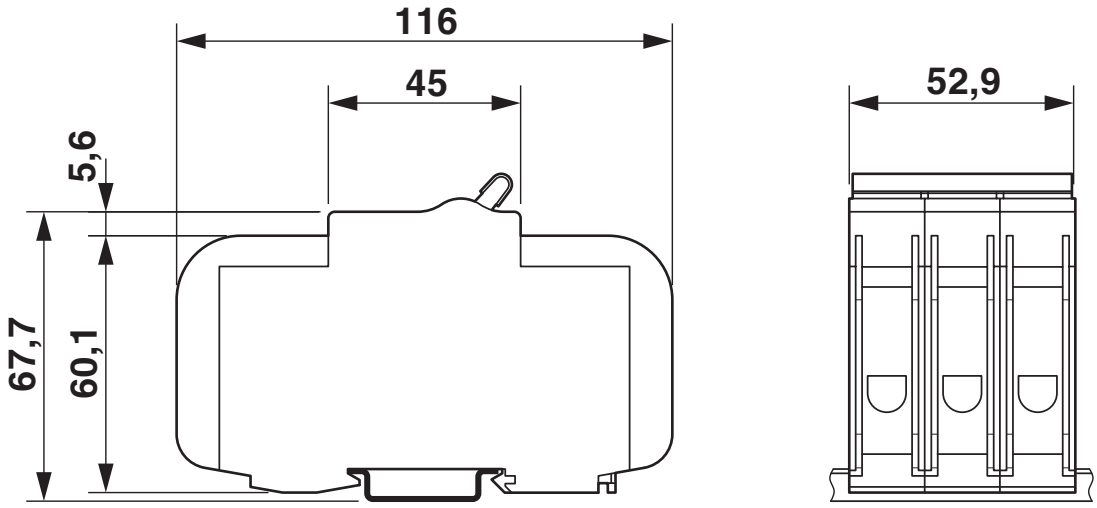

Diagram

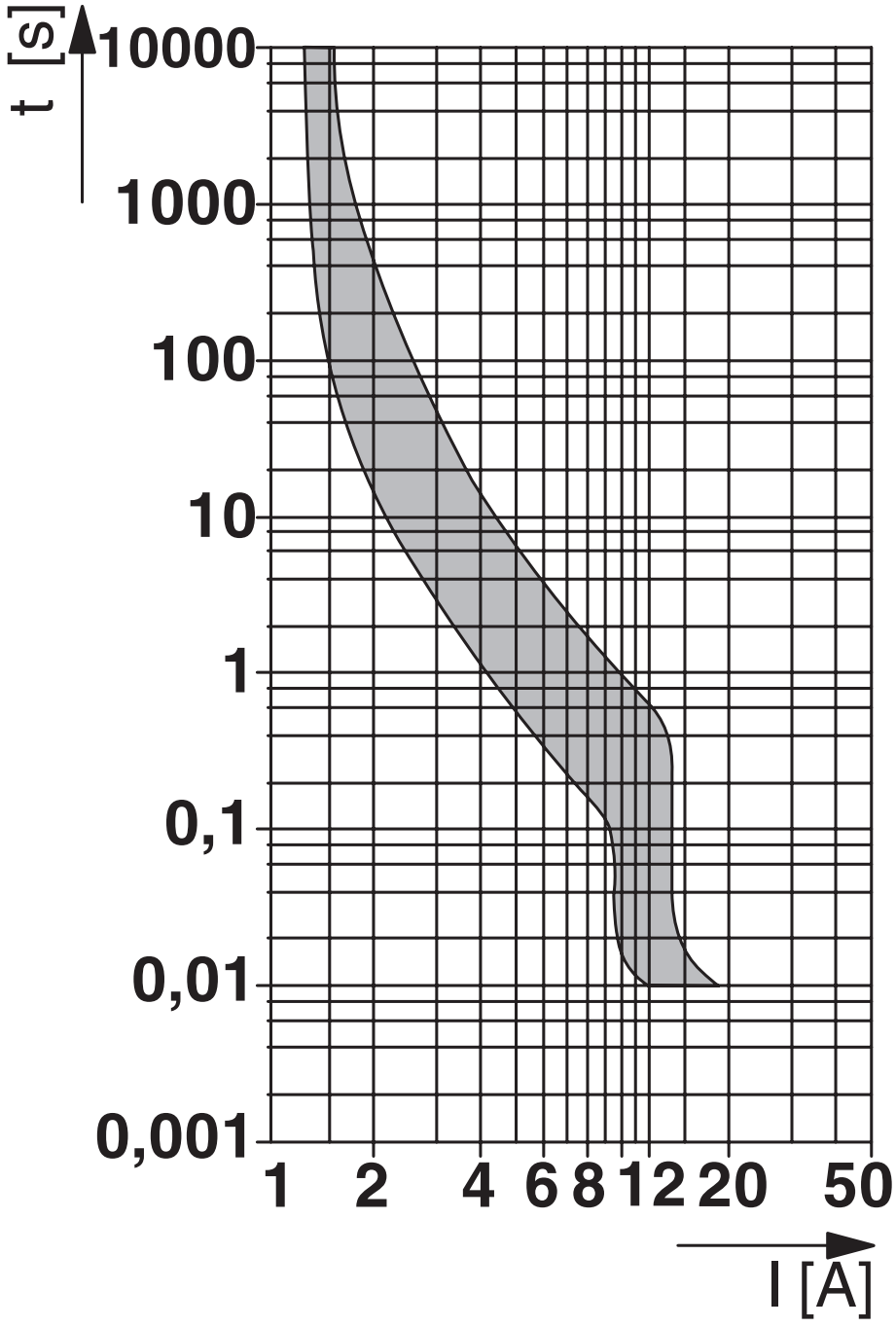

Approvals

To download certificates, visit the product detail page: https://www.phoenixcontact.com/us/products/1010290

UL Listed
Approval ID: FILE E 320373

cUL Listed
Approval ID: FILE E 320373

TÜV Rheinland
Approval ID: R 50531587

CCC
Approval ID: 2024010307673885

Classifications

ECLASS

ECLASS-13.0	27140401
ECLASS-15.0	27140401

ETIM

ETIM 9.0	EC003538

UNSPSC

UNSPSC 21.0	39121410

Environmental product compliance

EU RoHS

Fulfills EU RoHS substance requirements	Yes, No exemptions

China RoHS

Environment friendly use period (EFUP)	EFUP-E
	No hazardous substances above the limits

EU REACH SVHC

REACH candidate substance (CAS No.)	No substance above 0.1 wt%

EF3.0 Climate Change

CO2e kg	11.207 kg CO2e

Accessories

TMC 8 B3 80 57 C - Wiring bridge

2907996

https://www.phoenixcontact.com/us/products/2907996



Bus bar for TMC 83... circuit breakers (three phase) 17.8 mm pitch, up to 57 positions. Rated for 80 A (end feed) 600 V AC/DC. UL 508 Listed for connection of UL 489 rated circuit breakers.

TMC 8 B3 80 48 CA - Wiring bridge

2907997

https://www.phoenixcontact.com/us/products/2907997

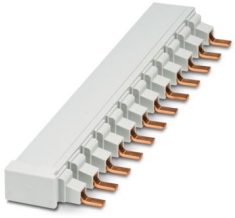

Bus bar for TMC 83... circuit breakers (three phase) with auxilliary switch. 17. 8 mm pitch, up to 48 positions. Rated for 80 A (end feed) 600 V AC/DC. UL 508 Listed for connection of UL 489 rated circuit breakers.

TMC 8 B TERM PIN - Terminal adapter

2907998

https://www.phoenixcontact.com/us/products/2907998

Feeder terminal adapter for TMC 8..... circuit breaker bus bars. Rated for 1000 V AC/DC, 115 A. Wire range 14…2 AWG. UL Listed for connection to UL 489 rated circuit breakers.



TMC 8 B END CAP - Wiring bridge end cover

2907999

https://www.phoenixcontact.com/us/products/2907999

Protective end covers for TMC 8 bus bars



TMC 8 B BUS CAP - Protective cover

2908000

https://www.phoenixcontact.com/us/products/2908000

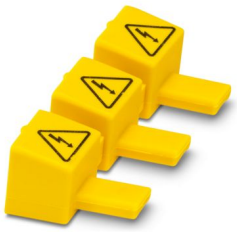

Protective covers for TMC 8 bus bars. Cuttable, three positions, yellow.

TMC 7/8 AUX - Auxiliary Contact

2908219

https://www.phoenixcontact.com/us/products/2908219



Auxiliary Contact, 1-position, connection method: Screw, mounting type: Snaps on to side of circuit breaker, rated current: 6 A

TMC 7/8 ALARM - Alarm Switch

2908220

https://www.phoenixcontact.com/us/products/2908220



Alarm Switch, 1-position, connection method: Screw, mounting type: Snaps on to side of circuit breaker, rated current: 6 A

TMC 7/8 12VDC SHNT - Shunt trip

2908221

https://www.phoenixcontact.com/us/products/2908221



Shunt trip, 1-position, connection method: Screw, mounting type: Snaps on to side of circuit breaker, rated current: 6 A

TMC 7/8 24VDC SHNT - Shunt trip

2908222

https://www.phoenixcontact.com/us/products/2908222



Shunt trip, 1-position, connection method: Screw, mounting type: Snaps on to side of circuit breaker, rated current: 6 A

TMC 7/8 48VDC SHNT - Shunt trip

2908224

https://www.phoenixcontact.com/us/products/2908224



Shunt trip, 1-position, connection method: Screw, mounting type: Snaps on to side of circuit breaker, rated current: 2 A

TMC 7/8 125VDC SHNT - Shunt trip

2908225

https://www.phoenixcontact.com/us/products/2908225



Shunt trip, 1-position, connection method: Screw, mounting type: Snaps on to side of circuit breaker, rated current: 1.5 A

TMC 7/8 120VAC SHNT - Shunt trip

2908226

https://www.phoenixcontact.com/us/products/2908226



Shunt trip, 1-position, connection method: Screw, mounting type: Snaps on to side of circuit breaker, rated current: 6 A

TMC 7/8 240VAC SHNT - Shunt trip

2908227

https://www.phoenixcontact.com/us/products/2908227



Shunt trip, 1-position, connection method: Screw, mounting type: Snaps on to side of circuit breaker, rated current: 6 A

TMC 7/8 277VAC SHNT - Shunt trip

2908228

https://www.phoenixcontact.com/us/products/2908228



Shunt trip, 1-position, connection method: Screw, mounting type: Snaps on to side of circuit breaker, rated current: 6 A

EML (10X4)R - Label

0815583

https://www.phoenixcontact.com/us/products/0815583



Label, Roll, white, unmarked, can be labeled with: THERMOMARK E.300 (D)/600 (D), THERMOMARK ROLL 2.0, THERMOMARK ROLL, THERMOMARK ROLL X1, THERMOMARK ROLLMASTER 300/600, THERMOMARK X1.2, mounting type: adhesive, Number of individual labels: 10000, text field height: 4 mm, text field width: 10 mm

TML (104X3,8)R - Marker strip

0801833

https://www.phoenixcontact.com/us/products/0801833



Marker strip, Roll, white, unmarked, can be labeled with: THERMOMARK E.300 (D)/600 (D), THERMOMARK ROLL 2.0, THERMOMARK ROLL, THERMOMARK ROLL X1, THERMOMARK ROLLMASTER 300/600, THERMOMARK X1.2, mounting type: adhesive, Number of individual labels: 2500, text field height: 3.8 mm, text field width: 104 mm

SZK PZ2 VDE - Screwdriver

1206463

https://www.phoenixcontact.com/us/products/1206463



Screwdriver, PZ crosshead, VDE insulated, size: PZ 2 x 100 mm, 2-component grip, with non-slip grip

Phoenix Contact 2025 © - all rights reserved
https://www.phoenixcontact.com

Phoenix Contact USA
586 Fulling Mill Road
Middletown, PA 17057, United States
(+717) 944-1300
info@phoenixcon.com