Littelfuse Power Semiconductors

Thyristors

6 Amp Sensitive & Standard SCRs

Sxx06xSx & Sxx06x Series

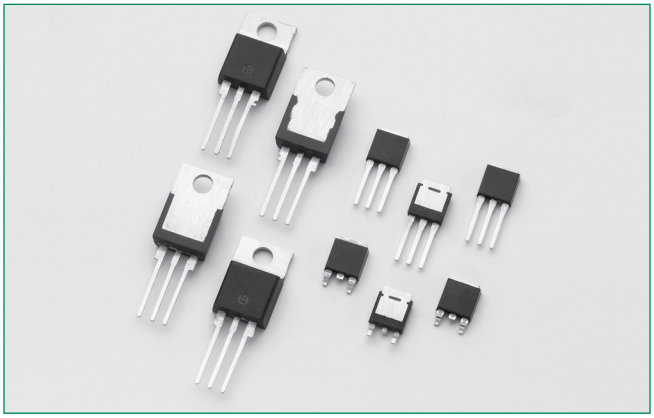

Description

This Sxx06x SCR series is ideal for uni-directional switch applications such as phase control, heating, motor speed controls, converters/rectifiers and capacitive discharge ignitions.

These SCRs have a low gate current trigger level of 0.2 to 15 mA at approximately 1.5V, with a sensitive version of this series having a gate trigger current less than 500µA. The sensitive gate SCR version is easily triggered by sense coils, proximity switches, and microprocessors.

Agency Approval

Agency	Agency File Number
	E71639*

* - L Package Only

Features & Benefits

- Halogen free and RoHS compliant
- Glass – passivated junctions
- Voltage capability up to 1000 V
- Surge capability up to 100 A at 60 Hz half cycle
- L-Package is UL recognized for 2500Vrms

Main Features

Symbol	Value	Unit
$I_{T(RMS)}$	6	A
V_{DRM}/V_{RRM}	400 to 1000	V
I_{GT}	0.2 to 15	mA

Applications

Typical applications are capacitive discharge systems for strobe lights, nailers, staplers and gas engine ignition. Also, AC control & rectification for power tools, home/brown goods and white goods appliances and 2-wheeler rectifier/battery regulators.

Internally constructed isolated packages are offered for ease of heat sinking with highest isolation voltage.

Additional Information

Datasheet | Resources | Samples

Schematic Symbol

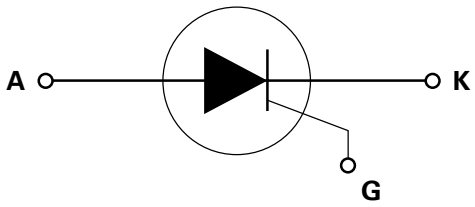

©2019 Littelfuse, Inc
Specifications are subject to change without notice.
Revised: BO.12/10/20

Absolute Maximum Ratings — Sensitive SCRs

Symbol	Parameter	Test Conditions		Value	Unit
$I_{T(RMS)}$	RMS on-state current	Sxx06LSy	T_C = 80°C	6	A
		Sxx06NSy Sxx06RSy Sxx06DSy Sxx06VSy	T_C = 95°C		
$I_{T(AV)}$	Average on-state current	Sxx06LSy	T_C = 80°C	3.8	A
		Sxx06NSy Sxx06RSy Sxx06DSy Sxx06VSy	TC = 95°C		
I_{TSM}	Peak non-repetitive surge current	single half cycle; f = 50Hz; T_J (initial) = 25°C		83	A
		single half cycle; f = 60Hz; T_J (initial) = 25°C		100	
I^2t	I^2t Value for fusing	t_p = 8.3 ms		41	A^2s
di/dt	Critical rate of rise of on-state current	f = 60Hz; T_J = 110°C		100	A/µs
I_{GTM}	Peak gate current	T_J = 110°C		1	A
$P_{G(AV)}$	Average gate power dissipation	T_J = 110°C		0.1	W
T_{stg}	Storage temperature range			-40 to 150	°C
T_J	Operating junction temperature range			-40 to 110	°C

Note: xx = voltage, y = sensitivity

Absolute Maximum Ratings — Standard SCRs

Symbol	Parameter			Value	Unit
$I_{T(RMS)}$	RMS on-state current	Sxx06L	T_C = 100°C	6	A
		Sxx06N Sxx06R Sxx06D Sxx06V	T_C = 110°C		
$I_{T(AV)}$	Average on-state current	Sxx06L	T_C = 100°C	3.8	A
		Sxx06N Sxx06R Sxx06D Sxx06V	T_C = 110°C		
I_{TSM}	Peak non-repetitive surge current	single half cycle; f = 50Hz; T_J (initial) = 25°C		83	A
		single half cycle; f = 60Hz; T_J (initial) = 25°C		100	
I^2t	I^2t value for fusing	t_p = 8.3 ms		41	A^2s
di/dt	Critical rate-of-rise of on-state current	f = 60Hz; T_J =125°C		100	A/µs
I_{GTM}	Peak gate current	T_J = 125°C		2	A
$P_{G(AV)}$	Average gate power dissipation	T_J = 125°C		0.5	W
T_{stg}	Storage temperature range			-40 to 150	°C
T_J	Operating junction temperature range			-40 to 125	°C

Note: xx = voltage

©2019 Littelfuse, Inc
Specifications are subject to change without notice.
Revised: BO.12/10/20

Electrical Characteristics (T_J = 25°C, unless otherwise specified) — Sensitive SCRs

Symbol	Test Conditions		Value		Unit
			Sxx06xS2	Sxx06xS3	
I_{GT}	V_D = 6V R_L = 100 Ω	MAX.	200	500	µA
V_{GT}	V_D = 6V R_L = 100 Ω	MAX.	0.8		V
dv/dt	$V_D = V_{DRM}$; R_{GK} = 1kΩ; T_J = 110°C	TYP.	8		V/µs
V_{GD}	$V_D = V_{DRM}$ R_L = 3.3 kΩ T_J = 110°C	MIN.	0.2		V
V_{GRM}	I_{GR} = 10µA	MIN.	6		V
I_H	I_T = 20mA (initial)	MAX.	6	8	mA
t_q	I_T = 2A; t_p= 50µs; dv/dt=5V/µs; di/dt=-30A/µs	MAX.	50	45	µs
t_{gt}	I_G = 2 x I_{GT} PW = 15µs I_T = 12A	TYP.	4	5	µs

Note: xx = voltage, x = package

Electrical Characteristics (T_J = 25°C, unless otherwise specified) — Standard SCRs

Symbol	Test Conditions			Value	Unit
				Sxx06x	
I_{GT}	V_D = 12V R_L = 60 Ω		MAX.	15	mA
V_{GT}	V_D = 12V R_L = 60 Ω		MAX.	1.5	V
dv/dt	$V_D = V_{DRM}$; gate open; T_J = 100°C	400V	MIN.	350	V/µs
		600V		300	
		800V		250	
		1000V		100	
	$V_D = V_{DRM}$; gate open; T_J = 125°C	400V		250	
		600V		225	
		800V		200	
V_{GD}	$V_D = V_{DRM}$ R_L = 3.3 kΩ T_J = 125°C		MIN.	0.2	V
I_H	I_T = 200mA (initial)		MAX.	30	mA
t_q	I_T = 2A; t_p= 50µs; dv/dt=5V/µs; di/dt=-30A/µs		MAX.	35	µs
t_{gt}	I_G = 2 x I_{GT} PW = 15µs I_T = 12A		TYP.	2	µs

Note: xx = voltage, x = package

©2019 Littelfuse, Inc
Specifications are subject to change without notice.
Revised: BO.12/10/20

Static Characteristics

Symbol	Test Conditions					Value	Unit
V_{TM}	I_T = 12A; t_p = 380 µs				MAX.	1.6	V
I_{DRM} / I_{RRM}	$V_{DRM} = V_{RRM}$	Sxx06xyy	T_J = 25°C	400 – 600V	MAX.	5	µA
			T_J = 110°C	400 – 600V		250	
		Sxx06x	T_J = 25°C	400 – 800V		10	
				1000V		20	
			T_J = 100°C	400 – 800V		200	
				1000V		3000	
			T_J = 125°C	400 – 800V		500	

Note: xx = voltage, x = package, yy = sensitivity

Thermal Resistances

Symbol	Parameter		Value	Unit
$R_{\theta(J-C)}$	Junction to case (AC)	Sxx06RSy / Sxx06NSy	2.6	°C/W
		Sxx06LSy	4.3	
		Sxx06VSy	2.4	
		Sxx06DSy	1.8	
		Sxx06R / Sxx06N	2.5	
		Sxx06L	4.0	
		Sxx06V	2.3	
		Sxx06D	1.7	
$R_{\theta(J-A)}$	Junction to ambient	Sxx06RSy	40	°C/W
		Sxx06LSy	65	
		Sxx06VSy	85	
		Sxx06R	40	
		Sxx06L	50	
		Sxx06V	70	

Note: xx = voltage, y = sensitivity

©2019 Littelfuse, Inc
Specifications are subject to change without notice.
Revised: BO.12/10/20

Figure 1: Normalized DC Gate Trigger Current vs. Junction Temperature (Sensitive SCR)

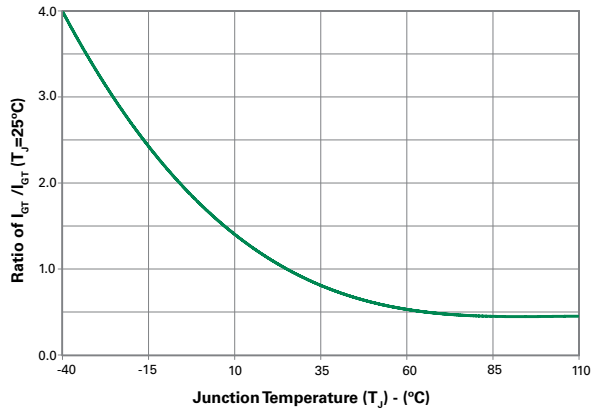

Figure 2: Normalized DC Gate Trigger Current vs. Junction Temperature (Standard SCR)

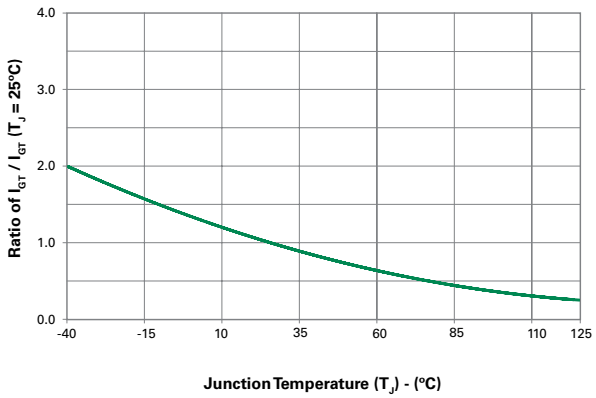

Figure 3: Normalized DC Gate Trigger Voltage vs. Junction Temperature

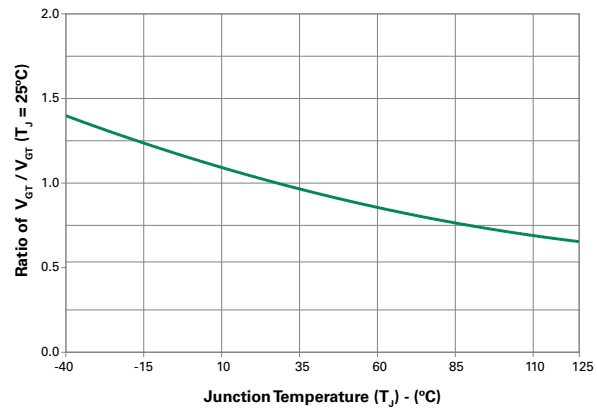

Figure 4: Normalized DC Holding Current vs. Junction Temperature

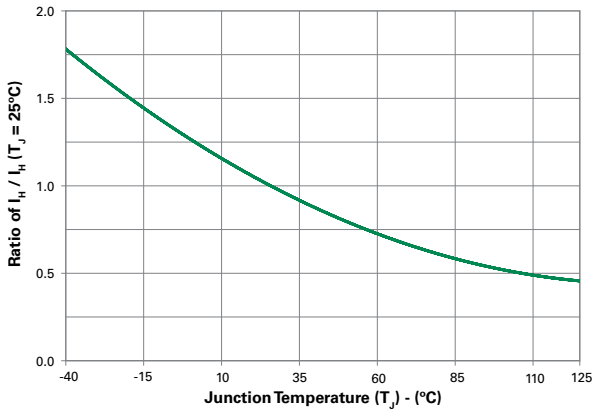

Figure 5: On-State Current vs. On-State Voltage (Typical)

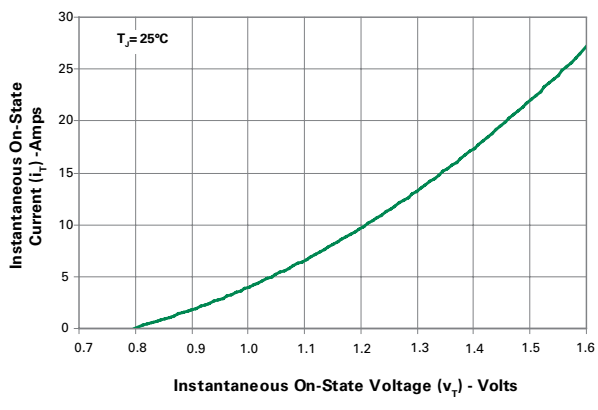

Figure 6: Power Dissipation (Typical) vs. RMS On-State Current

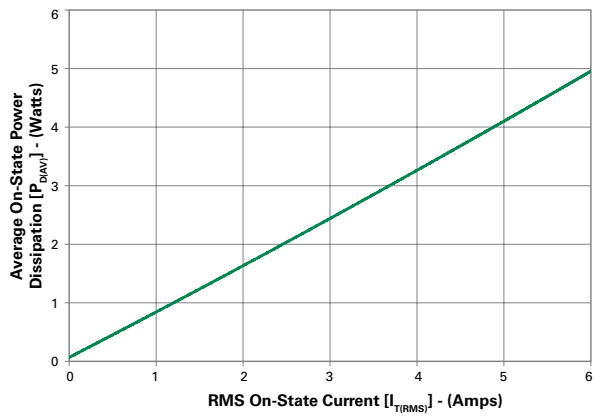

©2019 Littelfuse, Inc
Specifications are subject to change without notice.
Revised: BO.12/10/20

Figure 7: Maximum Allowable Case Temperature vs. RMS On-State Current

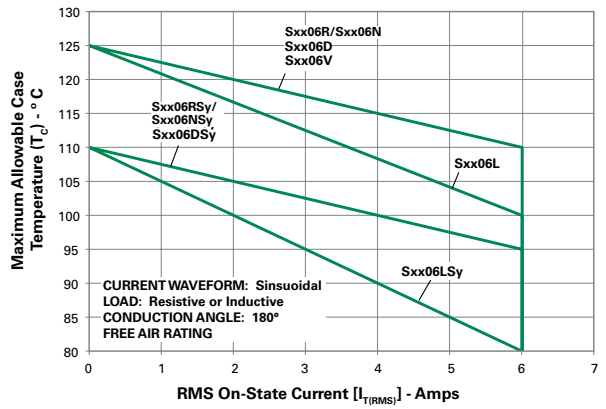

Figure 8: Maximum Allowable Case Temperature vs. Average On-State Current

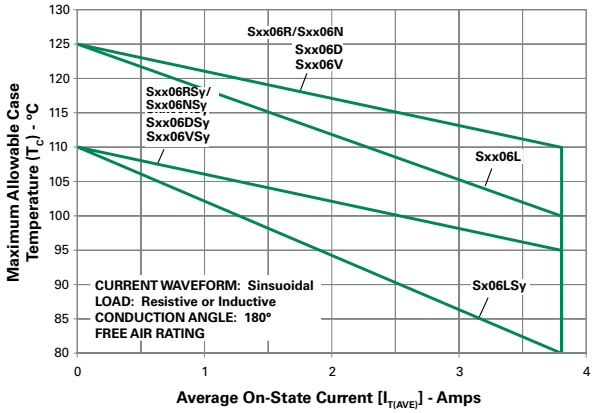

Figure 9: Maximum Allowable Ambient Temperature vs. RMS On-State Current

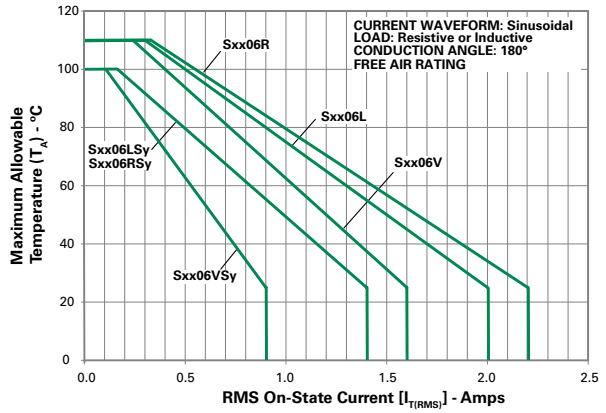

Figure 10: Maximum Allowable Ambient Temperature vs. Average On-State Current

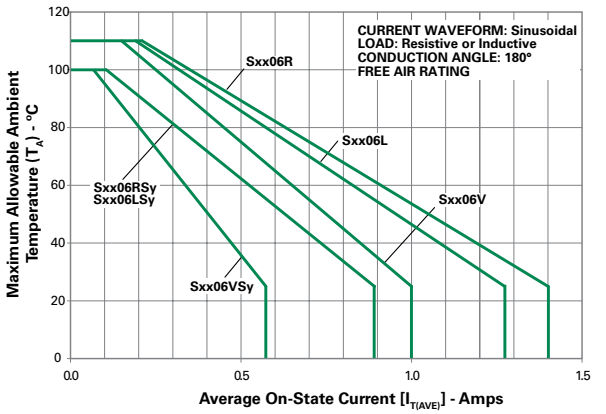

Note: xx = voltage, y = sensitivity

Figure 11: Peak Capacitor Discharge Current

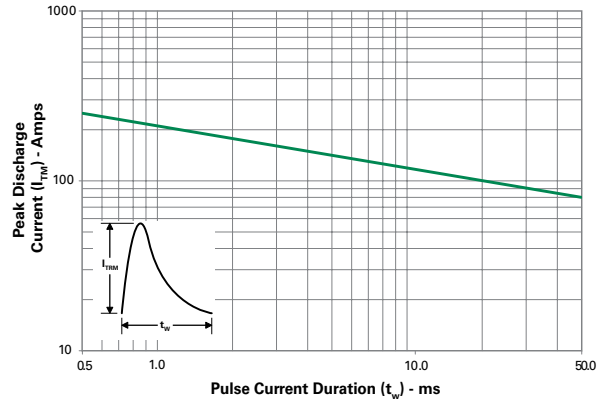

Figure 12: Peak Capacitor Discharge Current Derating

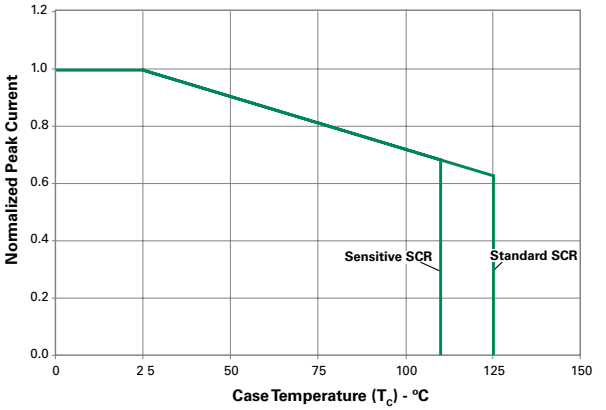

©2019 Littelfuse, Inc
Specifications are subject to change without notice.
Revised: BO.12/10/20

Figure 13-1: Typical DC Gate Trigger Current with R_{GK} vs. Junction Temperature for S6008DS2

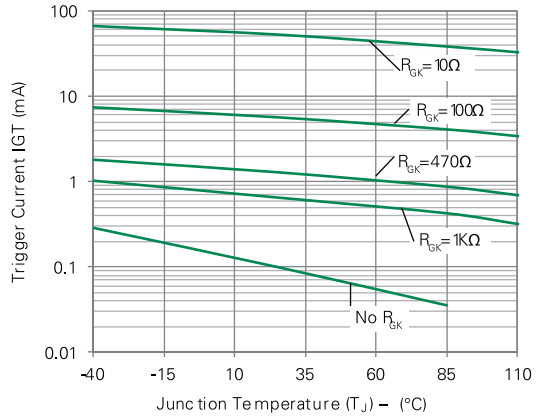

Figure 13-2: Typical DC Gate Trigger Current with R_{GK} vs. Junction Temperature for SS6008DS3

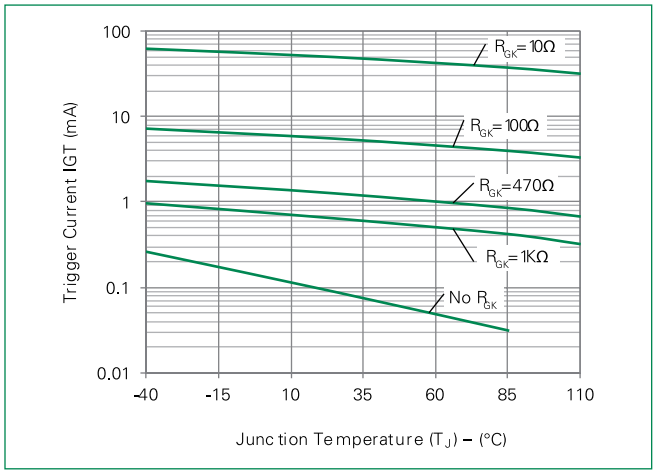

Figure 14-1: Typical DC Holding Current with R_{GK} vs. Junction Temperature for S6008DS2

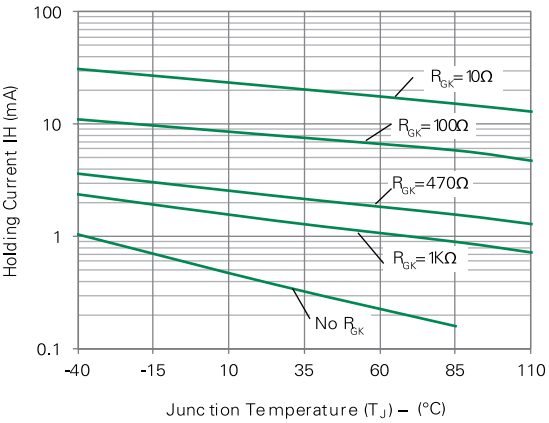

Figure 14-2 Typical DC Holding Current with R_{GK} vs. Junction Temperature for SS6008DS3

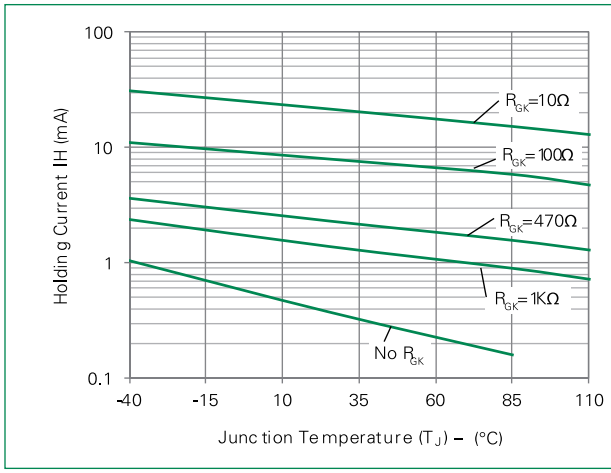

Figure 15-1: Typical Static dv/dt with R_{GK} vs. Junction Temperature for S6008DS2

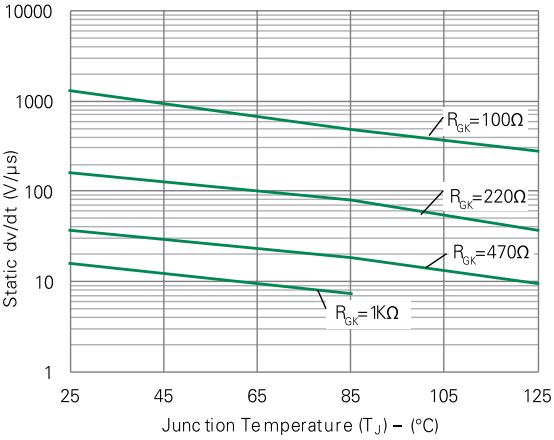

Figure 15-2 Typical Static dv/dt with R_{GK} vs. Junction Temperature for SS6008DS3

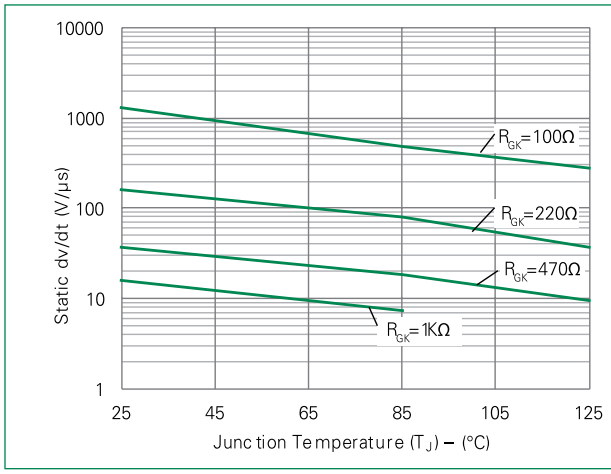

©2019 Littelfuse, Inc
Specifications are subject to change without notice.
Revised: BO.12/10/20

Figure 16-1: Typical Static dv/dt with R_{GK} vs. Junction Temperature for S6008DS2

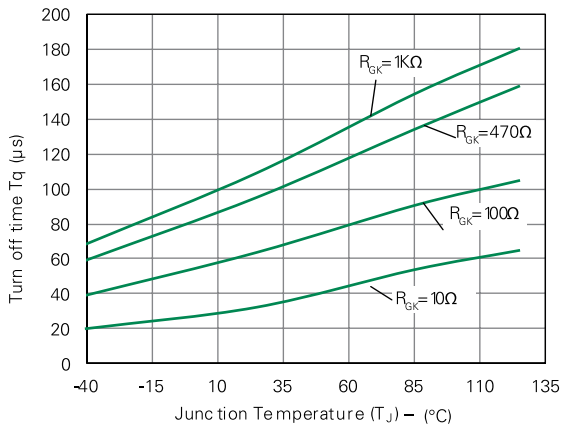

Figure 16-2 Typical Static dv/dt with R_{GK} vs. Junction Temperature for SS6008DS3

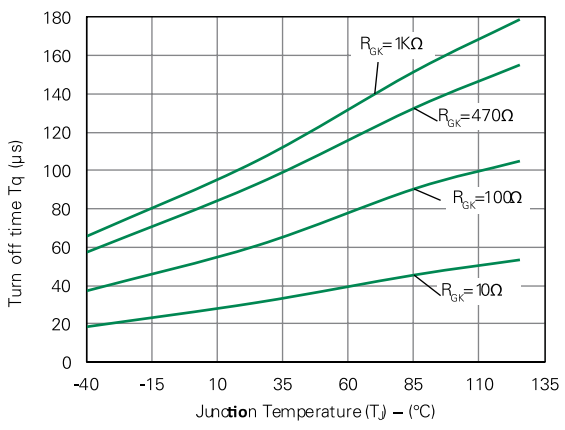

Figure 17: Surge Peak On-State Current vs. Number of Cycles

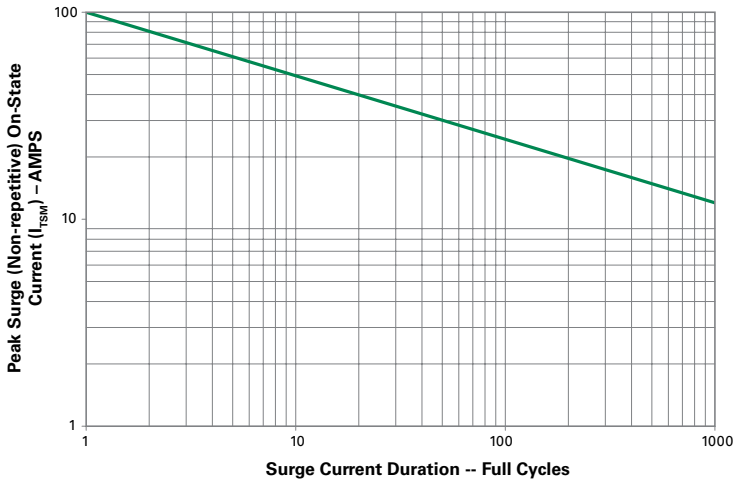

SUPPLY FREQUENCY: 60 Hz Sinusoidal
LOAD: Resistive
RMS On-State Current: [$I_{T(RMS)}$]: Maximum Rated Value at Specified Case Temperature

Notes:

1. Gate control may be lost during and immediately following surge current interval.
2. Overload may not be repeated until junction temperature has returned to steady-state rated value.

©2019 Littelfuse, Inc
Specifications are subject to change without notice.
Revised: BO.12/10/20

Soldering Parameters

Reflow Condition		Pb – Free assembly
Pre Heat	**- Temperature Min ($T_{s(min)}$)**	150°C
	- Temperature Max ($T_{s(max)}$)	200°C
	- Time (min to max) (t_s)	60 – 180 secs
Average ramp up rate (Liquidus Temp) (T_L) to peak		5°C/second max
$T_{S(max)}$ to T_L - Ramp-up Rate		5°C/second max
Reflow	**- Temperature (T_L) (Liquidus)**	217°C
	- Temperature (t_L)	60 – 150 seconds
Peak Temperature (T_P)		$260^{+0/-5}$ °C
Time within 5°C of actual peak Temperature (t_p)		20 – 40 seconds
Ramp-down Rate		5°C/second max
Time 25°C to peak Temperature (T_P)		8 minutes Max.
Do not exceed		280°C

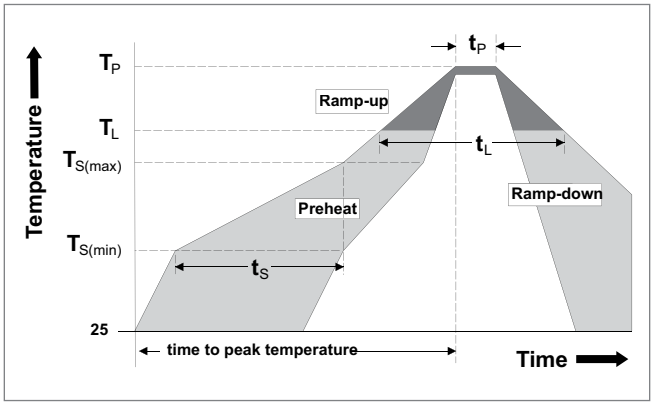

Physical Specifications

Terminal Finish	100% Matte Tin-plated
Body Material	UL recognized epoxy meeting flammability rating 94V-0
Lead Material	Copper Alloy

Design Considerations

Careful selection of the correct component for the application's operating parameters and environment will go a long way toward extending the operating life of the Thyristor. Good design practice should limit the maximum continuous current through the main terminals to 75% of the component rating. Other ways to ensure long life for a power discrete semiconductor are proper heat sinking and selection of voltage ratings for worst case conditions. Overheating, overvoltage (including dv/dt), and surge currents are the main killers of semiconductors. Correct mounting, soldering, and forming of the leads also help protect against component damage.

©2019 Littelfuse, Inc
Specifications are subject to change without notice.
Revised: BO.12/10/20

Environmental Specifications

Test	Specifications and Conditions
AC Blocking	MIL-STD-750, M-1040, Cond A Applied Peak AC voltage @ 125°C for 1008 hours
Temperature Cycling	MIL-STD-750, M-1051, 100 cycles; -40°C to +150°C; 15-min dwell-time
Temperature/Humidity	EIA / JEDEC, JESD22-A101 1008 hours; 320V - DC: 85°C; 85% rel humidity
High Temp Storage	MIL-STD-750, M-1031, 1008 hours; 150°C
Low-Temp Storage	1008 hours; -40°C
Resistance to Solder Heat	MIL-STD-750 Method 2031
Solderability	ANSI/J-STD-002, category 3, Test A
Lead Bend	MIL-STD-750, M-2036 Cond E

Product Selector

Part Number	Voltage				Gate Sensitivity	Type	Package
	400V	600V	800V	1000V			
Sxx06RS2	X	X	-	-	0.2mA	Sensitive SCR	TO-220R
Sxx06LS2	X	X	-	-	0.2mA	Sensitive SCR	TO-220L
Sxx06VS2	X	X	-	-	0.2mA	Sensitive SCR	TO-251
Sxx06DS2	X	X	-	-	0.2mA	Sensitive SCR	TO-252
Sxx06RS3	X	X	-	-	0.5mA	Sensitive SCR	TO-220R
Sxx06LS3	X	X	-	-	0.5mA	Sensitive SCR	TO-220L
Sxx06VS3	X	X	-	-	0.5mA	Sensitive SCR	TO-251
Sxx06DS3	X	X	-	-	0.5mA	Sensitive SCR	TO-252
Sxx06R	X	X	X	X	15mA	Standard SCR	TO-220R
Sxx06L	X	X	X	X	15mA	Standard SCR	TO-220L
Sxx06V	X	X	X	X	15mA	Standard SCR	TO-251
Sxx06D	X	X	X	X	15mA	Standard SCR	TO-252

Note: xx = voltage

©2019 Littelfuse, Inc
Specifications are subject to change without notice.
Revised: BO.12/10/20

Dimensions — TO-251AA (V/I-Package) — V/I-PAK Through Hole

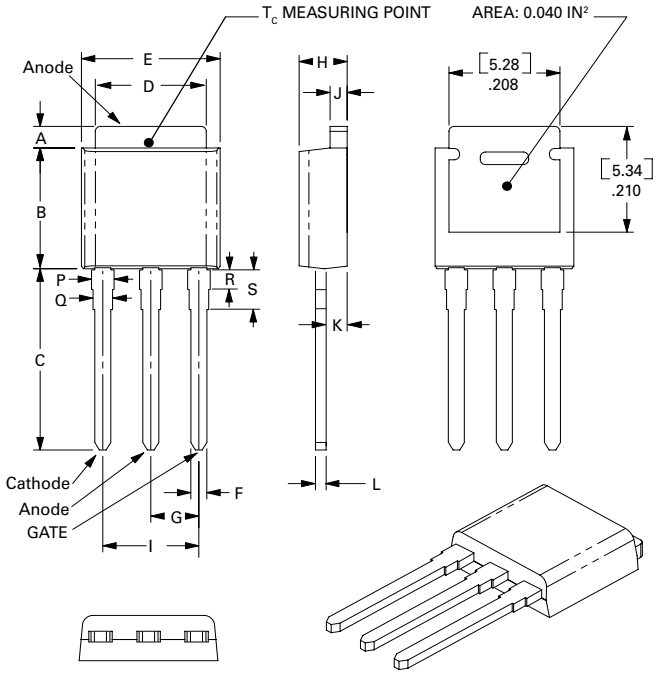

Dimension	Inches			Millimeters		
	Min	Typ	Max	Min	Typ	Max
A	0.037	0.040	0.043	0.94	1.01	1.09
B	0.235	0.242	0.245	5.97	6.15	6.22
C	0.350	0.361	0.375	8.89	9.18	9.53
D	0.205	0.208	0.213	5.21	5.29	5.41
E	0.255	0.262	0.265	6.48	6.66	6.73
F	0.027	0.031	0.033	0.69	0.80	0.84
G	0.087	0.090	0.093	2.21	2.28	2.36
H	0.085	0.092	0.095	2.16	2.34	2.41
I	0.176	0.180	0.184	4.47	4.57	4.67
J	0.018	0.020	0.023	0.46	0.51	0.58
K	0.035	0.037	0.039	0.90	0.95	1.00
L	0.018	0.020	0.023	0.46	0.52	0.58
P	0.042	0.047	0.052	1.06	1.20	1.32
Q	0.034	0.039	0.044	0.86	1.00	1.11
R	0.034	0.039	0.044	0.86	1.00	1.11
S	0.074	0.079	0.084	1.86	2.00	2.11

Dimensions — TO-252AA (D-Package) — D-PAK Surface Mount

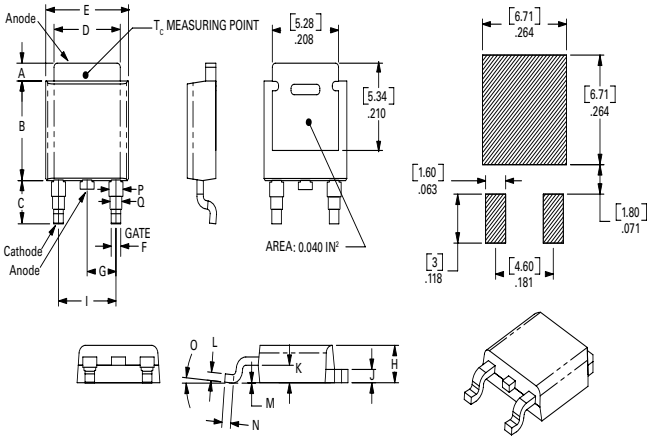

Dimension	Inches			Millimeters		
	Min	Typ	Max	Min	Typ	Max
A	0.037	0.040	0.043	0.94	1.01	1.09
B	0.235	0.243	0.245	5.97	6.16	6.22
C	0.106	0.108	0.113	2.69	2.74	2.87
D	0.205	0.208	0.213	5.21	5.29	5.41
E	0.255	0.262	0.265	6.48	6.65	6.73
F	0.027	0.031	0.033	0.69	0.80	0.84
G	0.087	0.090	0.093	2.21	2.28	2.36
H	0.085	0.092	0.095	2.16	2.33	2.41
I	0.176	0.179	0.184	4.47	4.55	4.67
J	0.018	0.020	0.023	0.46	0.51	0.58
K	0.035	0.037	0.039	0.90	0.95	1.00
L	0.018	0.020	0.023	0.46	0.51	0.58
M	0.000	0.000	0.004	0.00	0.00	0.10
N	0.021	0.026	0.027	0.53	0.67	0.69
O	0°	0°	5°	0°	0°	5°
P	0.042	0.047	0.052	1.06	1.20	1.32
Q	0.034	0.039	0.044	0.86	1.00	1.11

©2019 Littelfuse, Inc
Specifications are subject to change without notice.
Revised: BO.12/10/20

Dimensions — TO-220AB (R-Package) — Non-Isolated Mounting Tab Common with Center Lead

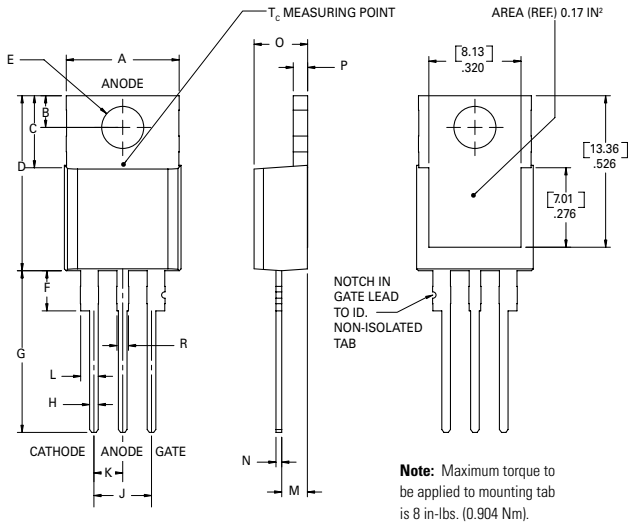

Note: Maximum torque to be applied to mounting tab is 8 in-lbs. (0.904 Nm).

Dimension	Inches		Millimeters	
	Min	Max	Min	Max
A	0.380	0.420	9.65	10.67
B	0.105	0.115	2.67	2.92
C	0.230	0.250	5.84	6.35
D	0.590	0.620	14.99	15.75
E	0.142	0.147	3.61	3.73
F	0.110	0.130	2.79	3.30
G	0.540	0.575	13.72	14.61
H	0.025	0.035	0.64	0.89
J	0.195	0.205	4.95	5.21
K	0.095	0.105	2.41	2.67
L	0.060	0.075	1.52	1.91
M	0.085	0.095	2.16	2.41
N	0.018	0.024	0.46	0.61
O	0.178	0.188	4.52	4.78
P	0.045	0.060	1.14	1.52
R	0.038	0.048	0.97	1.22

Dimensions — TO-220AB (L-Package) — Isolated Mounting Tab

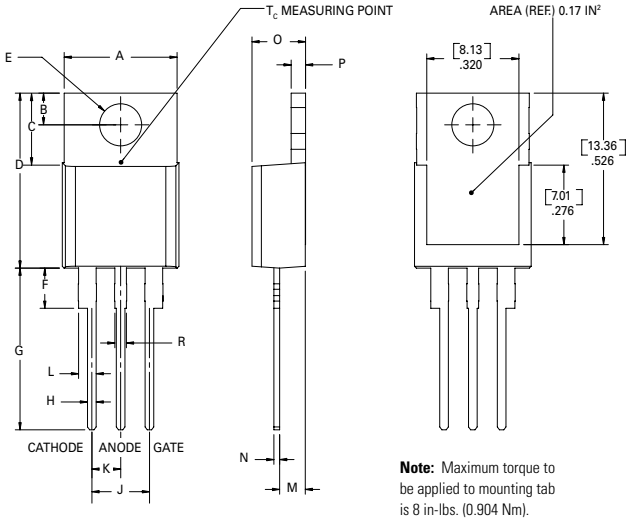

Note: Maximum torque to be applied to mounting tab is 8 in-lbs. (0.904 Nm).

Dimension	Inches		Millimeters	
	Min	Max	Min	Max
A	0.380	0.420	9.65	10.67
B	0.105	0.115	2.67	2.92
C	0.230	0.250	5.84	6.35
D	0.590	0.620	14.99	15.75
E	0.142	0.147	3.61	3.73
F	0.110	0.130	2.79	3.30
G	0.540	0.575	13.72	14.61
H	0.025	0.035	0.64	0.89
J	0.195	0.205	4.95	5.21
K	0.095	0.105	2.41	2.67
L	0.060	0.075	1.52	1.91
M	0.085	0.095	2.16	2.41
N	0.018	0.024	0.46	0.61
O	0.178	0.188	4.52	4.78
P	0.045	0.060	1.14	1.52
R	0.038	0.048	0.97	1.22

©2019 Littelfuse, Inc
Specifications are subject to change without notice.
Revised: BO.12/10/20

Dimensions — TO-263 (N Package) — D²Pak Surface Mount

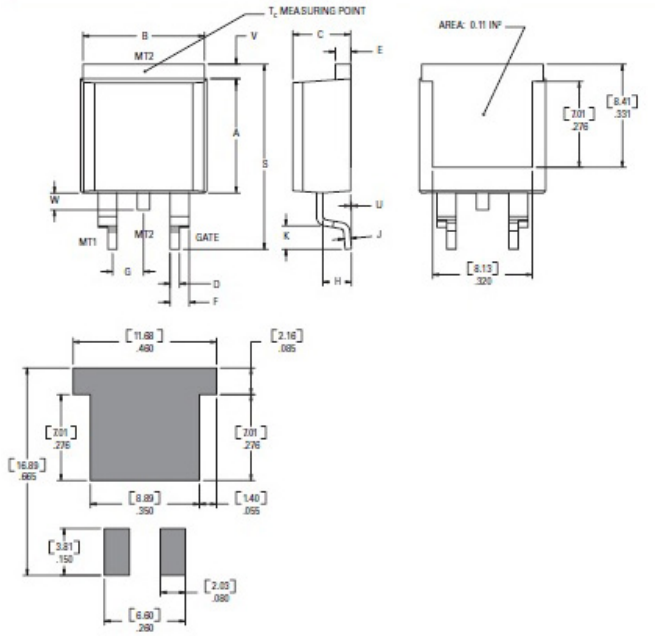

Dimension	Inches		Millimeters	
	Min	Max	Min	Max
A	0.360	0.370	9.14	9.40
B	0.380	0.420	9.65	10.67
C	0.178	0.188	4.52	4.78
D	0.025	0.035	0.64	0.89
E	0.045	0.060	1.14	1.52
F	0.060	0.075	1.52	1.91
G	0.095	0.105	2.41	2.67
H	0.092	0.102	2.34	2.59
J	0.018	0.024	0.46	0.61
K	0.090	0.110	2.29	2.79
S	0.590	0.625	14.99	15.88
V	0.035	0.045	0.89	1.14
U	0.002	0.010	0.05	0.25
W	0.040	0.070	1.02	1.78

Packing Options

Part Number	Marking	Weight	Packing Mode	Base Quantity
Sxx06L/RyyTP	Sxx06L/Ryy	2.2 g	Tube	1000 (50 per tube)
Sxx06DyyTP	Sxx06Dyy	0.3 g	Tube	750 (75 per tube)
Sxx06DyyRP	Sxx06Dyy	0.3 g	Embossed Carrier	2500
Sxx06VyyTP	Sxx06Vyy	0.4 g	Tube	750 (75 per tube)
Sxx06L/RTP	Sxx06L/R	2.2 g	Tube	1000 (50 per tube)
Sxx06DTP	Sxx06D	0.3 g	Tube	750 (75 per tube)
Sxx06DRP	Sxx06D	0.3 g	Embossed Carrier	2500
Sxx06VTP	Sxx06V	0.4 g	Tube	750 (75 per tube)
Sxx06NyyRP	Sxx6Nyy	1.6g	Embossed Carrier	500
Sxx06NyyTP	Sxx6Nyy	1.6g	Tube	1000 (50 per tube)
Sxx06NRP	Sxx6N	1.6g	Embossed Carrier	500
Sxx06NTP	Sxx6N	1.6g	Tube	1000 (50 per tube)

Note: xx = Voltage/10; yy = Sensitivity

©2019 Littelfuse, Inc
Specifications are subject to change without notice.
Revised: BO.12/10/20

TO-252 Embossed Carrier Reel Pack (RP) Specs

Meets all EIA-481-2 Standards

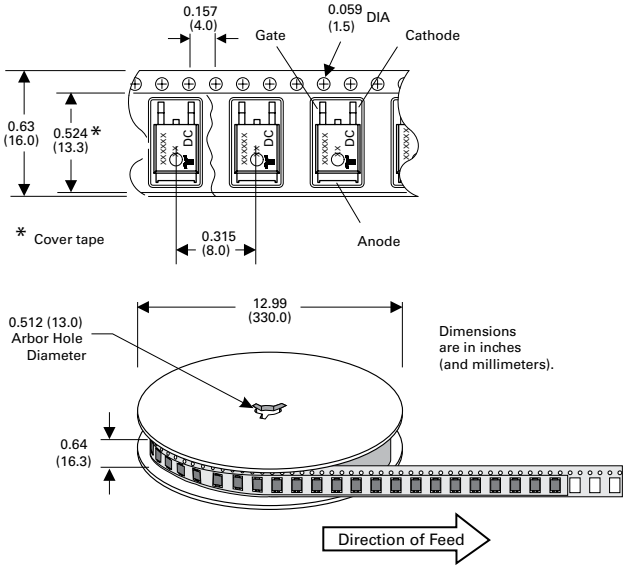

Part Marking System

TO-251AA- (V Package)
TO-252AA- (D Package)

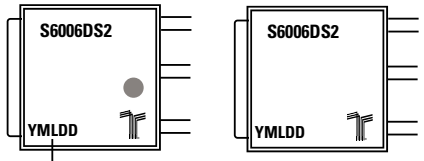

Date Code Marking
Y:Year Code
M: Month Code
L: Location Code
DD: Calendar Code

TO-263 AA - (N Package)
TO-220 AB - (L and R Package)

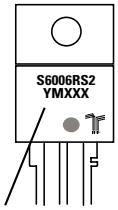

Date Code Marking
Y:Year Code
M: Month Code
XXX: Lot Trace Code

Part Numbering System

S 60 06 L S2 56

COMPONENT
S: SCR

VOLTAGE RATING
40: 400V
60: 600V
80: 800V
K0: 1000V

CURRENT RATING
06: 6A

PACKAGE TYPE
L: TO-220 Isolated
R: TO-220 Non-Isolated

SENSITIVITY & TYPE
Sensitive SCR:
S2: 200µA
S3: 500µA
Standard SCR:
(blank): 15mA

LEAD FORM DIMENSIONS
xx: Lead Form Option

Disclaimer Notice - Information furnished is believed to be accurate and reliable. However, users should independently evaluate the suitability of and test each product selected for their own applications. Littelfuse products are not designed for, and may not be used in, all applications. Read complete Disclaimer Notice at http://www.littelfuse.com/disclaimer-electronics.

©2019 Littelfuse, Inc
Specifications are subject to change without notice.
Revised: BO.12/10/20