**Data sheet | Item number: 721-163/001-040**

THT male header; 1.2 x 1.2 mm solder pin; straight; 100% protected against mismating; Preceding ground contact; Pin spacing 5 mm; 3-pole; light gray

www.wago.com/721-163/001-040

Color:

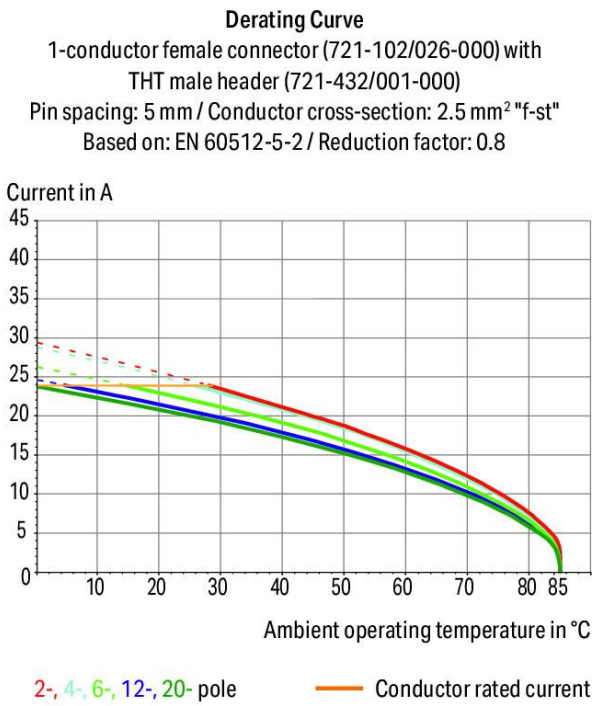


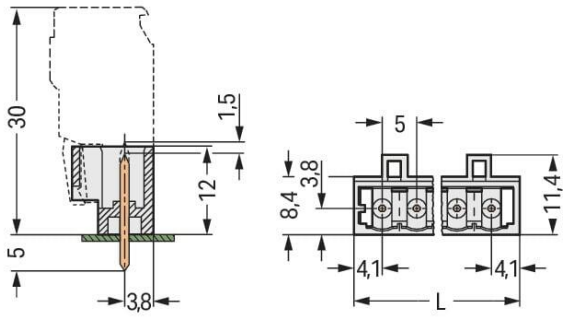


Dimensions in mm

L = (pole no. – 1) x pin spacing + 8.2 mm

Subject to changes. Please also observe the further product documentation!

WAGO GmbH & Co. KG
Hansastr. 27
32423 Minden
Phone: +49571 887-0 | Fax: +49571 887-169
Email: info.de@wago.com | Web: www.wago.com

Do you have any questions about our products?
We are always happy to take your call at +49 (571) 887-44222.

## Item description

- Horizontal or vertical PCB mounting via straight or angled solder pins
- 1.2 x 1.2 mm solder pins allow nominal current up to 16 A, enhancing stability of shorter headers
- 100 % protected against mismating
- With coding fingers

## Data

### Notes

| | |
|---|---|
| Safety information | The *MCS – MULTI CONNECTION SYSTEM* includes connectors without breaking capacity in accordance with DIN EN 61984. When used as intended, these connectors must not be connected /disconnected when live or under load.When used as intended, these connectors must not be connected/disconnected when live or under load. The circuit design should ensure header pins, which can be touched, are not live when unmated. |
| Variants: | Other pole numbers<br>3.8 mm pin projection for male headers with straight solder pins<br>Gold-plated or partially gold-plated contact surfaces<br>Other versions (or variants) can be requested from WAGO Sales or configured at https://configurator.wago.com/. |

## Electrical data

### Ratings per IEC/EN

| | |
|---|---|
| Ratings per | IEC/EN 60664-1 |
| Nominal voltage (III/3) | 250 V |
| Rated impulse voltage (III/3) | 4 kV |
| Rated voltage (III/2) | 320 V |
| Rated impulse voltage (III/2) | 4 kV |
| Nominal voltage (II/2) | 630 V |
| Rated surge voltage (II/2) | 4 kV |
| Rated current | 16 A |
| Legend (ratings) | (III / 2) ≙ Overvoltage category III / Pollution degree 2 |

### Ratings per UL

| | |
|---|---|
| Approvals per | UL 1059 |
| Rated voltage UL (Use Group B) | 300 V |
| Rated current UL (Use Group B) | 15 A |

Subject to changes. Please also observe the further product documentation!

WAGO GmbH & Co. KG
Hansastr. 27
32423 Minden
Phone: +49571 887-0 | Fax: +49571 887-169
Email: info.de@wago.com | Web: www.wago.com

Do you have any questions about our products?
We are always happy to take your call at +49 (571) 887-44222.

| | |
|---|---|
| Rated voltage UL (Use Group D) | 300 V |
| Rated current UL (Use Group D) | 10 A |

## Ratings per UL 1977

| | |
|---|---|
| Rated voltage (UL 1977) | 600 V |
| Rated current UL 1977 | 15 A |

## Ratings per CSA

| | |
|---|---|
| Approvals per | CSA |
| Rated voltage CSA (Use Group B) | 300 V |
| Rated current CSA (Use Group B) | 15 A |
| Rated voltage CSA (Use Group D) | 300 V |
| Rated current CSA (Use Group D) | 10 A |

## Connection data

| | |
|---|---|
| Total number of potentials | 3 |
| Number of connection types | 1 |
| Number of levels | 1 |
| PE function | Preceding PE contact |

## Connection 1

| | |
|---|---|
| Pole number | 3 |

## Physical data

| | |
|---|---|
| Pin spacing | 5 mm / 0.197 inches |
| Width | 18.2 mm / 0.717 inches |
| Height | 17 mm / 0.669 inches |
| Height from the surface | 12 mm / 0.472 inches |
| Depth | 11.4 mm / 0.449 inches |
| Solder pin length | 5 mm |
| Solder pin dimensions | 1.2 x 1.2 mm |
| Drilled hole diameter with tolerance | $1.7\ ^{(+0.1)}$ mm |

## Mechanical data

| | |
|---|---|
| Variable coding | Yes |

Subject to changes. Please also observe the further product documentation!

WAGO GmbH & Co. KG
Hansastr. 27
32423 Minden
Phone: +49571 887-0 | Fax: +49571 887-169
Email: info.de@wago.com | Web: www.wago.com

Do you have any questions about our products?
We are always happy to take your call at +49 (571) 887-44222.

| | |
|---|---|
| Anti-rotation protection | Yes |

## Plug-in connection

| | |
|---|---|
| Contact type (pluggable connector) | Male connector/plug |
| Connector (connection type) | for PCB |
| Mismating protection | Yes |
| Plugging without loss of pin spacing | No |
| Mating direction to the PCB | 90 ° |
| Locking of plug-in connection | none |

## PCB contact

| | |
|---|---|
| PCB contact | THT |
| Solder pin arrangement | over the entire male connector (in-line) |
| Number of solder pins per potential | 1 |

## Material data

| | |
|---|---|
| Note (material data) | Information on material specifications can be found here |
| Color | light gray |
| Material group | I |
| Insulation material | Polyamide (PA66) |
| Flammability class per UL94 | V0 |
| Contact material | Electrolytic copper ($E_{Cu}$) |
| Contact plating | Tin |
| Fire load | 0.023 MJ |
| Weight | 1.4 g |

## Environmental requirements

| | |
|---|---|
| Limit temperature range | -60 … +100 °C |
| Processing temperature | -35 … +60 °C |

## Commercial data

| | |
|---|---|
| Product Group | 3 (Multi Conn. System) |
| eCl@ss 10.0 | 27-44-04-02 |
| eCl@ss 9.0 | 27-44-04-02 |

Subject to changes. Please also observe the further product documentation!

WAGO GmbH & Co. KG
Hansastr. 27
32423 Minden
Phone: +49571 887-0 | Fax: +49571 887-169
Email: info.de@wago.com | Web: www.wago.com

Do you have any questions about our products?
We are always happy to take your call at +49 (571) 887-44222.

| | |
|---|---|
| ETIM 8.0 | EC002637 |
| ETIM 7.0 | EC002637 |
| ECCN | NO DATA |
| PU (SPU) | 200 pcs |
| Packaging type | box |
| Country of origin | PL |
| GTIN | 4044918945417 |
| Customs tariff number | 85366930000 |

## Environmental Product Compliance

| | |
|---|---|
| RoHS Compliance Status | Compliant,No Exemption |

## Approvals / Certificates

### General approvals

| Logo | Approval | Additional Approval Text | Certificate name |
|---|---|---|---|
| | **CB**<br>DEKRA Certification B.V. | IEC 61984 | NL-39756/A1 |
| | **CCC**<br>CQC | GB/T 13140.1 | CQC03003003013 |
| | **CSA**<br>DEKRA Certification B.V. | C22.2 | 1466354 |
| | **KEMA/KEUR**<br>DEKRA Certification B.V. | EN 61984 | 71-121453 |
| | **UL**<br>Underwriters Laboratories Inc. | UL 1977 | E45171 |

### Declarations of conformity and manufacturer's declarations

| Logo | Approval | Additional Approval Text | Certificate name |
|---|---|---|---|
| | **Railway**<br>WAGO GmbH & Co. KG | - | Railway Ready |

Subject to changes. Please also observe the further product documentation!

WAGO GmbH & Co. KG
Hansastr. 27
32423 Minden
Phone: +49571 887-0 | Fax: +49571 887-169
Email: info.de@wago.com | Web: www.wago.com

Do you have any questions about our products?
We are always happy to take your call at +49 (571) 887-44222.

### Approvals for marine applications

| Logo | Approval | Additional Approval Text | Certificate name |
|---|---|---|---|
| | **ABS**<br>American Bureau of Shipping | - | 19-HG1869876-PDA |
| | **BV**<br>Bureau Veritas S.A. | IEC 60998 | 11915/D0 BV |
| | **DNV**<br>DNV GL SE | - | TAE000016Z |

## Counterpart

**Item no.721-103/026-000**
1-conductor female connector; CAGE CLAMP®; 2.5 mm²; Pin spacing 5 mm; 3-pole; 100% protected against mismating; 2,50 mm²; light gray

www.wago.com/721-103/026-000

## Optional accessories

### Marking accessories

Marking strip

**Item no.: 210-833**
Marking strips; 25  m on roll; 6 mm wide; plain; Self-adhesive; white

www.wago.com/210-833

**Item no.: 210-834**
Marking strips; on reel; 5 mm wide; plain; Self-adhesive; white

www.wago.com/210-834

### Coding

Coding

**Item no.: 231-129**
Coding key; snap-on type; light gray

www.wago.com/231-129

## Downloads

## Documentation

### Additional Information

Subject to changes. Please also observe the further product documentation!

WAGO GmbH & Co. KG
Hansastr. 27
32423 Minden
Phone: +49571 887-0 | Fax: +49571 887-169
Email: info.de@wago.com | Web: www.wago.com

Do you have any questions about our products?
We are always happy to take your call at +49 (571) 887-44222.

| | | | |
|---|---|---|---|
| Technical Section<br>Technical explanations | 2019 年4月3日 | pdf<br>2.1 MB | Download |

## CAD/CAE-Data

### CAD data

| | | |
|---|---|---|
| 2D/3D Models 721-163/001-040 | URL | Download |

### CAE data

| | | |
|---|---|---|
| EPLAN Data Portal 721-163/001-040 | URL | Download |
| ZUKEN Portal 721-163/001-040 | URL | Download |
| EPLAN Data Portal 721-163/001-040 | URL | Download |

### PCB Design

| | | |
|---|---|---|
| Symbol and Footprint via Ultra Librarian 721-163/001-040 | URL | Download |

CAx data for your PCB design, consisting of "schematic symbols and PCB footprints", allow easy integration of the WAGO component into your development environment.

Supported formats:

- Accel EDA 14 & 15
- Altair
- Altium 6 to current version
- Autodesk Fusion 360
- Cadence Allegro
- DesignSpark
- Eagle Libraries
- KiCad
- Mentor Graphics
- BoardStation
- Mentor Graphics Design Architect
- Mentor Graphics Design
- Expedition 99 and 2000
- OrCAD 9.X PCB and Capture
- PADS PowerPCB 3, 3.5, 4.X, and 5.X
- PADS PowerPCB and PowerLogic 3.0

Subject to changes. Please also observe the further product documentation!

WAGO GmbH & Co. KG
Hansastr. 27
32423 Minden
Phone: +49571 887-0 | Fax: +49571 887-169
Email: info.de@wago.com | Web: www.wago.com

Do you have any questions about our products?
We are always happy to take your call at +49 (571) 887-44222.

- PCAD 2000, 2001, 2002, 2004, and 2006
- Pulsonix 8.5 or newer
- STL
- 3D STEP
- TARGET 3001!
- View Logic ViewDraw
- Quadcept
- Zuken CadStar 3 and 4
- Zuken CR-5000 and CR-8000
- Zuken eCADSTAR 2020 and 2021Zuken CR-5000 and CR-8000

PCB Component Libraries (EDA), PCB CAD Library Ultra Librarian

Symbol and Footprint via SamacSys 721-163/001-040 URL Download

CAx data for your PCB design, consisting of "schematic symbols and PCB footprints", allow easy integration of the WAGO component into your development environment.

Supported formats:

- 3D (stp)
- Altium
- CADSTAR
- Capture
- CircuitStudio
- CR-5000
- CR-8000
- DEHDL
- DesignSpark PCB
- DesignSpark PCB PRO
- DipTrace
- EAGLE
- Easy-PC
- EasyEDA
- eCADSTAR
- KiCad
- OrCAD_Allegro16
- PADS
- Proteus
- Pulsonix

Subject to changes. Please also observe the further product documentation!

WAGO GmbH & Co. KG
Hansastr. 27
32423 Minden
Phone: +49571 887-0 | Fax: +49571 887-169
Email: info.de@wago.com | Web: www.wago.com

Do you have any questions about our products?
We are always happy to take your call at +49 (571) 887-44222.

- Quadcept
- SOLIDWORKS PCB
- TARGET 3001!
- xDX Designer
- Xpedition

PCB Component Libraries (EDA), PCB CAD Library SamacSys Electronic Component Search Engine

**Asset Administration Shell**

| | | |
|---|---|---|
| Asset Administration Shell 721-163/001-040 | URL | Download |

## Environmental Product Compliance

**Compliance Search**

| | | |
|---|---|---|
| Environmental Product Compliance 721-163/001-040<br>THT male header; 1.2 x 1.2 mm solder pin; straight; 100% protected against mismating; Preceding ground contact; Pin spacing 5 mm; 3-pole; light gray | URL | Download |

## Installation Notes

## Product family

**MCS MIDI**
Show all products from the family



WAGO GmbH & Co. KG
Hansastr. 27
32423 Minden
Phone: +49571 887-0 | Fax: +49571 887-169
Email: info.de@wago.com | Web: www.wago.com

Do you have any questions about our products?
We are always happy to take your call at +49 (571) 887-44222.