Data sheet

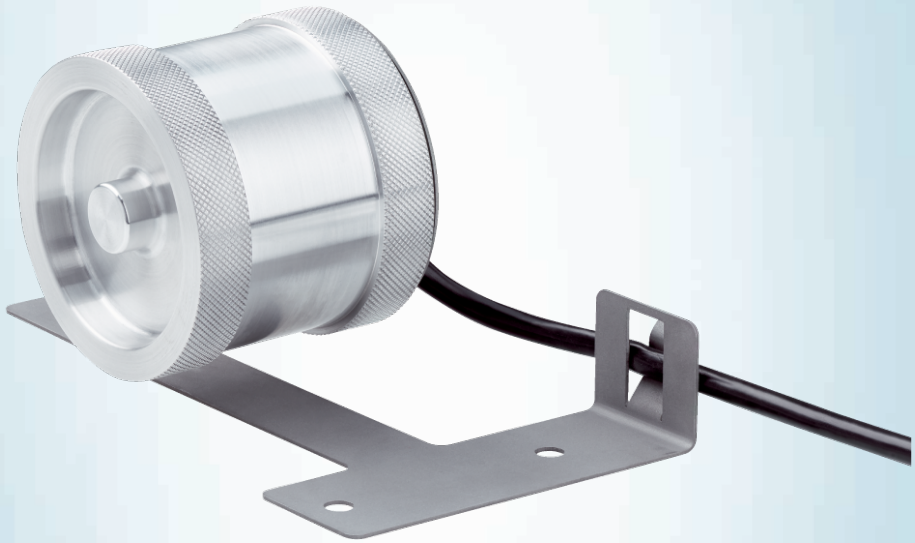

DKV60E-21APA0200

DKV60

MEASURING WHEEL ENCODERS

SICK
Sensor Intelligence.

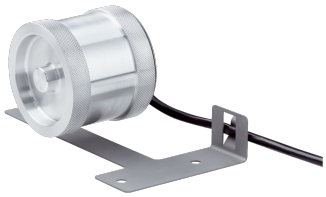

Illustration may differ

Ordering information

Type	part no.
DKV60E-21APA0200	1115692

Other models and accessories ➜ www.sick.com/DKV60

Detailed technical data

Safety-related parameters

$MTTF_D$ (mean time to dangerous failure)	600 years (EN ISO 13849-1) [1]

[1] This product is a standard product and does not constitute a safety component as defined in the Machinery Directive. Calculation based on nominal load of components, average ambient temperature 40 °C, frequency of use 8760 h/a. All electronic failures are considered hazardous. For more information, see document no. 8015532.

Performance

Pulses per revolution	200
Resolution in pulses/mm	1
Measuring increment (resolution in mm/pulse)	1
Measuring step deviation	± 18°, / pulses per revolution
Error limits	± 0.5 mm/m, subject to the measuring wheel (wheel + surface)
Duty cycle	≤ 0.5 ± 5 %
Initialization time	≤ 3 ms

Interfaces

Communication interface	Incremental
Communication Interface detail	TTL / RS-422
Number of signal channels	6-channel

Electrical data

Operating power consumption (no load)	50 mA
Connection type	Cable, 8-wire, with male connector, M12, 8-pin, universal, 1.5 m
Supply voltage	4.5 V ... 5.5 V
Load current max.	30 mA
Maximum output frequency	≤ 300 kHz
Reference signal, number	1
Reference signal, position	90°, electric, logically gated with A and B
Reverse polarity protection	✓
Short-circuit protection of the outputs	✓ [1]

[1] Short-circuit opposite to another channel, US or GND permissable for maximum 30 s.

Mechanical data

Measuring wheel circumference	200 mm
Measuring wheel surface	Cross knurled aluminium [1]
Spring arm design	69.5 mm spring arm
Mass	420 g
Encoder material	
Shaft	Stainless steel
Flange	Aluminum
Housing	Aluminum
Cable	PVC
Spring arm mechanism material	
Spring element	Spring steel, anti-corrosive
Measuring wheel, spring arm	Spring steel, anti-corrosive
Start up torque	0.9 Ncm (at 20 °C)
Operating torque	0.4 Ncm (at 20 °C)
Operating speed	≤ 1,000 min^{-1}
Maximum operating speed	1,500 min^{-1}
Bearing lifetime	2 x 10^9 revolutions
Maximum travel/deflection of spring arm	8 mm at 14 N spring travel
Recommended pretension	8 N at 4 mm deflection [2]
Max. permissible working area for the spring (continuous operation)	± 1.5 mm
Recommended spring deflection	2 mm ... 8 mm
Mounted encoder	DBS50 Core, DBS50E-SKAPA0200

[1] The surface of a measuring wheel is subject to wear. This depends on contact pressure, acceleration behavior in the application, traversing speed, measurement surface, mechanical alignment of the measuring wheel, temperature, and ambient conditions. We recommend you regularly check the condition of the measuring wheel and replace as required.

[2] When measured from the top of the measuring surface.

Ambient data

EMC	According to EN 61000-6-2 and EN 61000-6-3 (class A)
Enclosure rating	IP65
Permissible relative humidity	90 % (Condensation not permitted)
Operating temperature range	–20 °C ... +60 °C –35 °C ... +95 °C (on request)
Storage temperature range	–40 °C ... +100 °C, without package

Certificates

EU declaration of conformity	✓
UK declaration of conformity	✓
ACMA declaration of conformity	✓
China-RoHS	✓

Classifications

ECLASS 5.0	27270501
ECLASS 5.1.4	27270501

ECLASS 6.0	27270590
ECLASS 6.2	27270590
ECLASS 7.0	27270501
ECLASS 8.0	27270501
ECLASS 8.1	27270501
ECLASS 9.0	27270501
ECLASS 10.0	27270790
ECLASS 11.0	27270707
ECLASS 12.0	27270504
ETIM 5.0	EC001486
ETIM 6.0	EC001486
ETIM 7.0	EC001486
ETIM 8.0	EC001486
UNSPSC 16.0901	41112113

Dimensional drawing

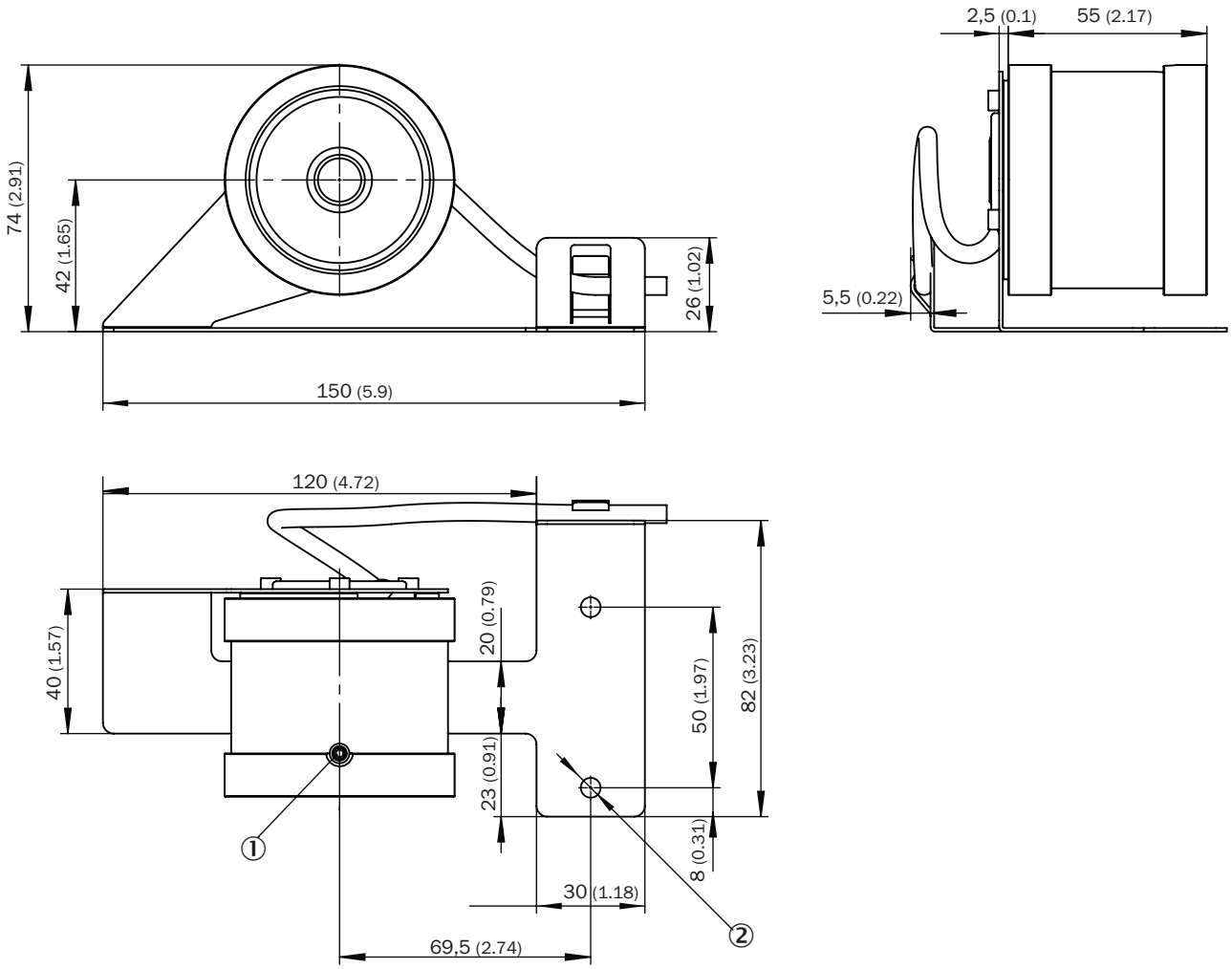

Dimensions in mm (inch)
① M4 x 20 set screw
② 2 x Ø 5.5

PIN assignment

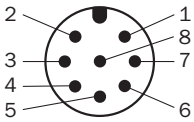

view of M12 male device connector on cable / housing

Wire colors (cable connection)	Male connector M12, 8-pin	TTL/HTL 6-channel signal	Explanation
Brown	1	A-	Signal cable
White	2	A	Signal cable
Black	3	B-	Signal cable
Pink	4	B	Signal cable
Yellow	5	Z-	Signal cable
Purple	6	Z	Signal cable
Blue	7	GND	Ground connection
Red	8	$+U_s$	Supply voltage
Screen	Screen	Screen	Screen connected to encoder housing

Diagrams

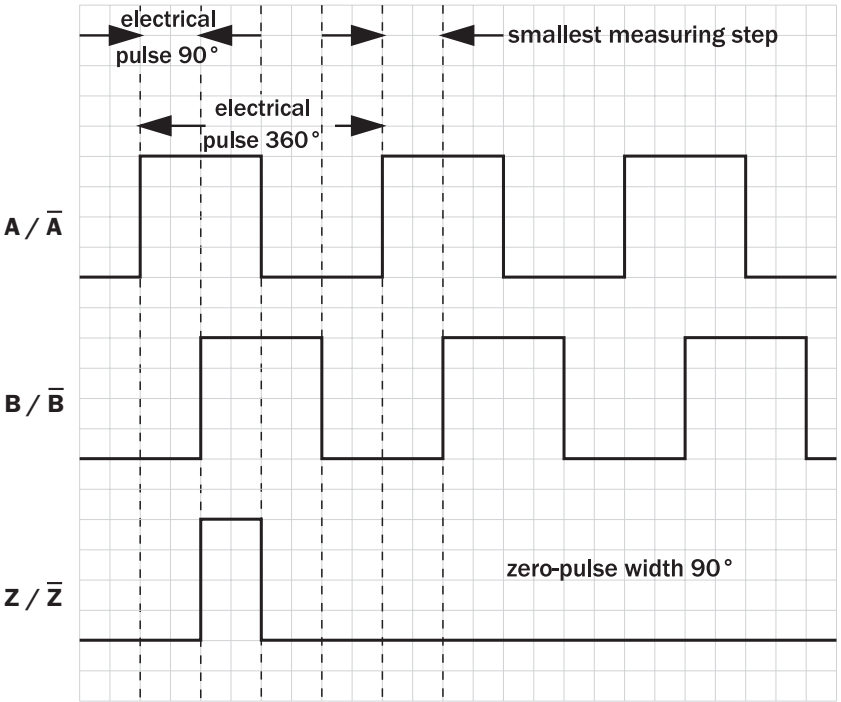

Recommended accessories

Other models and accessories ➜ www.sick.com/DKV60

	Brief description	Type	part no.
connectors and cables			
	• **Connection type head A:** Female connector, M23, 12-pin, straight • **Connection type head B:** Flying leads • **Signal type:** Incremental • **Cable:** 2 m, 11-wire, PUR • **Description:** Incremental, shielded	DOL-2312-G02MLA3	2030682
	• **Connection type head A:** Female connector, M23, 12-pin, straight • **Connection type head B:** Flying leads • **Signal type:** Incremental • **Cable:** 7 m, 11-wire, PUR • **Description:** Incremental, shielded	DOL-2312-G07MLA3	2030685
	• **Connection type head A:** Female connector, M23, 12-pin, straight • **Connection type head B:** Flying leads • **Signal type:** Incremental • **Cable:** 10 m, 11-wire, PUR • **Description:** Incremental, shielded	DOL-2312-G10MLA3	2030688
	• **Connection type head A:** Female connector, M23, 12-pin, straight • **Connection type head B:** Flying leads • **Signal type:** Incremental • **Cable:** 15 m, 11-wire, PUR • **Description:** Incremental, shielded	DOL-2312-G15MLA3	2030692
	• **Connection type head A:** Female connector, M23, 12-pin, straight • **Connection type head B:** Flying leads • **Signal type:** Incremental • **Cable:** 20 m, 11-wire, PUR • **Description:** Incremental, shielded	DOL-2312-G20MLA3	2030695
	• **Connection type head A:** Female connector, M23, 12-pin, straight • **Connection type head B:** Flying leads • **Signal type:** Incremental • **Cable:** 25 m, 11-wire, PUR • **Description:** Incremental, shielded	DOL-2312-G25MLA3	2030699
	• **Connection type head A:** Female connector, M23, 12-pin, straight • **Connection type head B:** Flying leads • **Signal type:** Incremental • **Cable:** 30 m, 11-wire, PUR • **Description:** Incremental, shielded	DOL-2312-G30MLA3	2030702
	• **Connection type head A:** Female connector, M23, 12-pin, straight • **Connection type head B:** Flying leads • **Signal type:** Incremental • **Cable:** 1.5 m, 12-wire, PUR, halogen-free • **Description:** Incremental, shielded	DOL-2312-G1M5MA3	2029212
	• **Connection type head A:** Female connector, M23, 12-pin, straight • **Connection type head B:** Flying leads • **Signal type:** Incremental • **Cable:** 3 m, 12-wire, PUR, halogen-free • **Description:** Incremental, shielded	DOL-2312-G03MMA3	2029213
	• **Connection type head A:** Female connector, M23, 12-pin, straight • **Connection type head B:** Flying leads • **Signal type:** Incremental • **Cable:** 5 m, 12-wire, PUR, halogen-free • **Description:** Incremental, shielded	DOL-2312-G05MMA3	2029214
	• **Connection type head A:** Female connector, M23, 12-pin, straight • **Connection type head B:** Flying leads • **Signal type:** Incremental • **Cable:** 10 m, 12-wire, PUR, halogen-free • **Description:** Incremental, shielded	DOL-2312-G10MMA3	2029215
	• **Connection type head A:** Female connector, M23, 12-pin, straight • **Connection type head B:** Flying leads • **Signal type:** Incremental • **Cable:** 20 m, 12-wire, PUR, halogen-free • **Description:** Incremental, shielded	DOL-2312-G20MMA3	2029216
	• **Connection type head A:** Female connector, M23, 12-pin, straight • **Connection type head B:** Flying leads • **Signal type:** Incremental	DOL-2312-G30MMA3	2029217

	Brief description	Type	part no.
	• **Cable:** 30 m, 12-wire, PUR, halogen-free • **Description:** Incremental, shielded		
	• **Connection type head A:** Female connector, M12, 8-pin, straight • **Connection type head B:** Flying leads • **Signal type:** Incremental, SSI • **Cable:** 2 m, 8-wire, PUR, halogen-free • **Description:** Incremental, shieldedSSI • **Connection systems:** Flying leads	DOL-1208-G02MAC1	6032866
	• **Connection type head A:** Female connector, M12, 8-pin, straight • **Connection type head B:** Flying leads • **Signal type:** Incremental, SSI • **Cable:** 5 m, 8-wire, PUR, halogen-free • **Description:** Incremental, shieldedSSI • **Connection systems:** Flying leads	DOL-1208-G05MAC1	6032867
	• **Connection type head A:** Female connector, M12, 8-pin, straight • **Connection type head B:** Flying leads • **Signal type:** Incremental, SSI • **Cable:** 10 m, 8-wire, PUR, halogen-free • **Description:** Incremental, shieldedSSI • **Connection systems:** Flying leads	DOL-1208-G10MAC1	6032868
	• **Connection type head A:** Female connector, M12, 8-pin, straight • **Connection type head B:** Flying leads • **Signal type:** Incremental, SSI • **Cable:** 20 m, 8-wire, PUR, halogen-free • **Description:** Incremental, shieldedSSI • **Connection systems:** Flying leads	DOL-1208-G20MAC1	6032869
	• **Connection type head A:** Female connector, M12, 8-pin, straight • **Connection type head B:** Flying leads • **Signal type:** Incremental, SSI • **Cable:** 25 m, 8-wire, PUR, halogen-free • **Description:** Incremental, shieldedSSI • **Connection systems:** Flying leads	DOL-1208-G25MAC1	6067859

SICK AT A GLANCE

SICK is one of the leading manufacturers of intelligent sensors and sensor solutions for industrial applications. A unique range of products and services creates the perfect basis for controlling processes securely and efficiently, protecting individuals from accidents and preventing damage to the environment.

We have extensive experience in a wide range of industries and understand their processes and requirements. With intelligent sensors, we can deliver exactly what our customers need. In application centers in Europe, Asia and North America, system solutions are tested and optimized in accordance with customer specifications. All this makes us a reliable supplier and development partner.

Comprehensive services complete our offering: SICK LifeTime Services provide support throughout the machine life cycle and ensure safety and productivity.

For us, that is “Sensor Intelligence.”

WORLDWIDE PRESENCE:

Contacts and other locations –www.sick.com