Automotive Power MOSFET Module

NXV10V160ST1

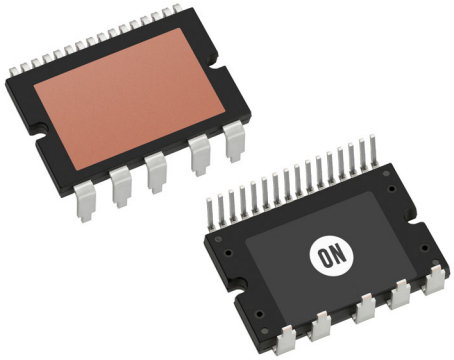

APM21−CGA
CASE MODBQ

Features

- 3 Phase MOSFET Module
- Electrically Isolated DBC Substrate for Low Thermal Resistance
- Temperature Sensing
- Compact Design for Low Total Module Resistance
- Module Serialization for Full Traceability
- AQG324 Qualified and PPAP Capable
- Pb−free, RoHS and UL94V−0 Compliant

Typical Applications

- 48V E−Compressor and Other 48 V Auxiliaries

Benefits

- Enable Design of Small, Efficient and Reliable System for Reduced Vehicle Fuel Consumption and CO_2 Emission
- Simplified Vehicle Assembly
- Enable Low Thermal Resistance to Junction−to−Heat Sink by Direct Mounting via Thermal Interface Material between Module Case and Heat Sink

MARKING DIAGRAM

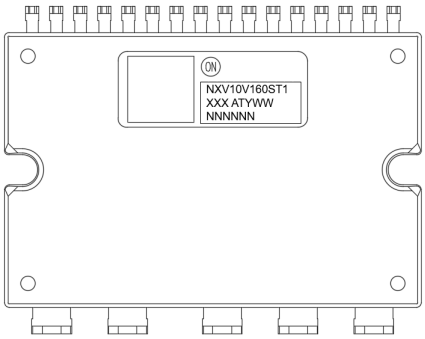

NXV10V160ST1 = Specific Device Code
XXX = Lot ID
AT = Assembly & Test Location
Y = Year
WW = Work Week
NNN = Serial Number

ORDERING INFORMATION

See detailed ordering and shipping information on page 2 of this data sheet.

© Semiconductor Components Industries, LLC, 2022

ORDERING INFORMATION

Device	Package	Packing Method	Shipping
NXV10V160ST1	APM21−CGA	Tube	44 Units / Box

Pin Configuration

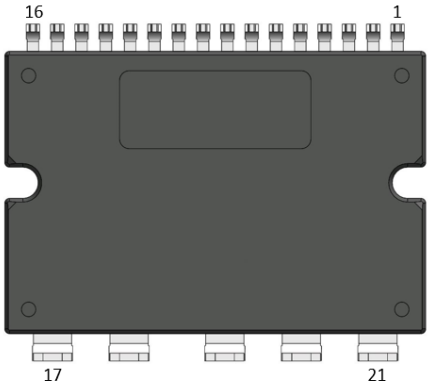

Figure 1. Pin Configuration

PIN DESCRIPTION

Pin Number	Pin Name	Description
1	NTC+	NTC Thermistor Terminal 1
2	NTC−	NTC Thermistor Terminal 2
3	Sense Q6	Source of Q6
4	G3	Gate of Q3, high side Phase W MOSFET
5	Sense Q3	Source of Q3
6	G6	Gate of Q6, low side Phase W MOSFET
7	Sense Q5	Source of Q5
8	G2	Gate of Q2, high side Phase V MOSFET
9	Sense Q2	Source of Q2
10	G5	Gate of Q5, low side Phase V MOSFET
11	G4	Gate of Q4, low side Phase U MOSFET
12	Sense Q4	Source of Q4
13	Sense Q1	Source of Q1
14	G1	Gate of Q1, high side Phase U MOSFET
15	Vbat Sense	Common pins for Sense of Vbat
16	Vbat Sense	Common pins for Sense of Vbat, one of pin 15 or 16 can be used for Sense of Vbat
17	B+	Battery voltage power lead
18	GND	Battery return power lead
19	U	Phase U (Phase 1)
20	V	Phase V (Phase 2)
21	W	Phase W (Phase 3)

Block Diagram

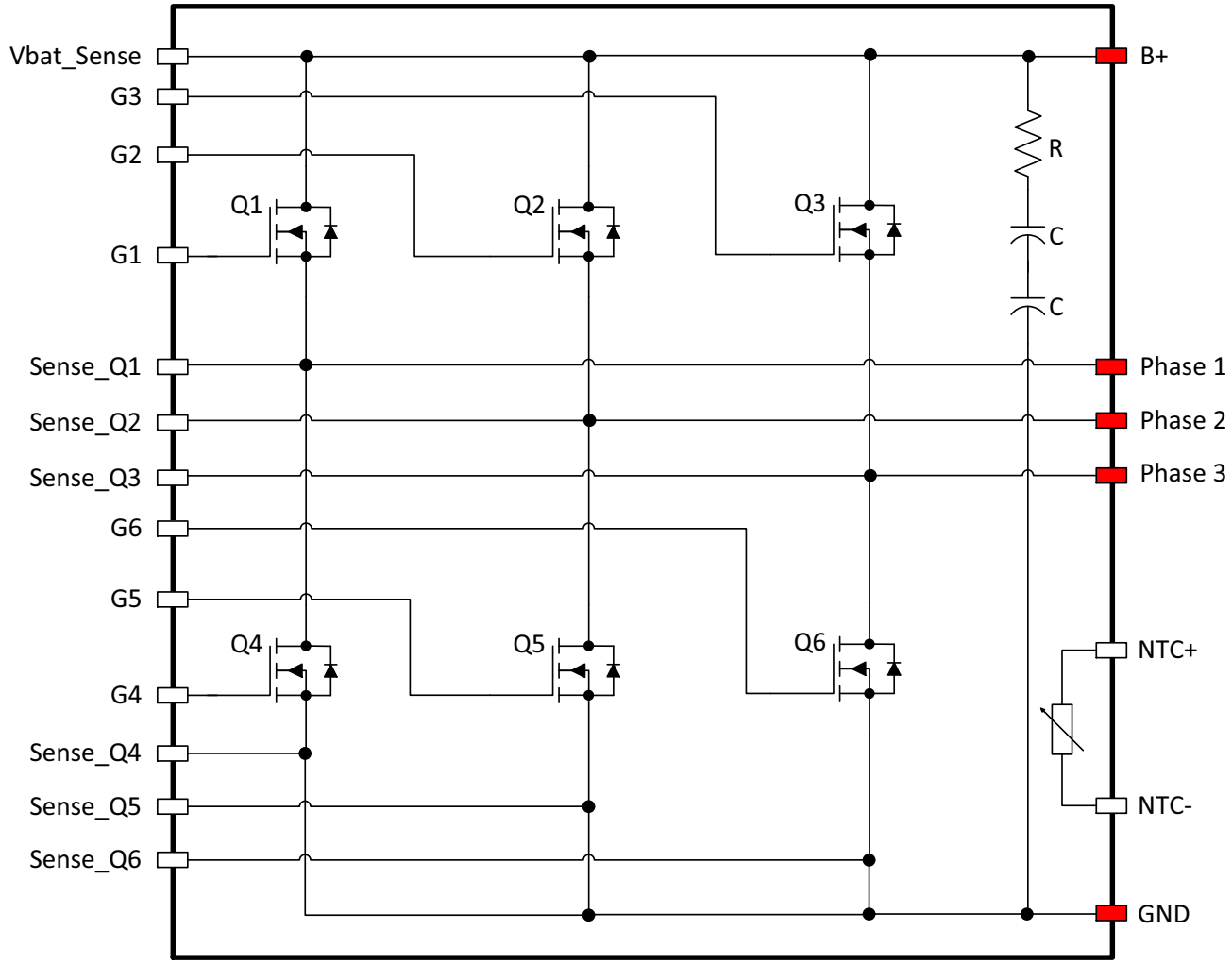

Figure 2. Schematic

Flammability Information

All materials present in the power module meet UL flammability rating class 94V−0 or higher.

Compliance to RoHS Directives

The power module is 100% lead free and RoHS compliant 2000/53/C directive.

Solder

Solder used is a lead free SnAgCu alloy.

Base of the leads, at the interface with the package body should not be exposed to more than 200°C during mounting on the PCB, this to prevent the remelt of the solder joints.

ABSOLUTE MAXIMUM RATINGS (T_J = 25°C unless otherwise specified)

Symbol	Parameter	Value	Unit
V_{DS}	Drain−to−Source Voltage	100	V
V_{GS}	Gate−to−Source Voltage	±20	V
E_{AS}	Single Pulse Avalanche Energy (I_{PK} = 50 A)	587	mJ
$T_{J(max)}$	Maximum Junction Temperature	175	°C
T_{STG}	Storage Temperature Range	−45 to 150	°C

Stresses exceeding those listed in the Maximum Ratings table may damage the device. If any of these limits are exceeded, device functionality should not be assumed, damage may occur and reliability may be affected.

THERMAL CHARACTERISTICS

Symbol	Parameter	Min	Typ	Max	Unit
$R_{\theta JC}$	Thermal Resistance, Junction−to−Case (Note 1)	–	0.26	0.36	°C/W

1. Test method compliant with MIL−STD−883−1012.1

ISOLATION VOLTAGE

Symbol	Parameter	Min	Typ	Max	Unit
–	Leakage @Isolation Voltage, V_{AC} = 3 kV, 1 second	–	–	250	μA

ELECTRICAL CHARACTERISTICS (T_J = 25°C; unless otherwise noted)

Symbol	Parameter	Conditions	Min	Typ	Max	Unit
B_{VDSS}	Drain−to−Source Breakdown Voltage	I_D = 250 μA, V_{GS} = 0 V	100	–	–	V
I_{DSS}	Drain−to−Source Leakage Current	V_{GS} = 0 V, V_{DS} = 100 V	–	–	5	μA
I_{GSS}	Gate−to−Source Leakage Current	V_{GS} = ±20 V	–	–	±100	nA
$V_{GS(TH)}$	Gate−to−Source Threshold Voltage	V_{GS} = V_{DS}, I_D = 250 μA	2.0	–	4.5	V
$R_{DS(ON)}$ Q1	MOSFET $R_{DS(ON)}$ for Q1−Q6 (Notes 2, 3)	I_D = 80 A, V_{GS} = 12 V	–	1.43	1.92	mΩ
$R_{DS(ON)}$ Q2			–	1.53	2.05	mΩ
$R_{DS(ON)}$ Q3			–	1.64	2.20	mΩ
$R_{DS(ON)}$ Q4			–	1.34	1.80	mΩ
$R_{DS(ON)}$ Q5			–	1.36	1.82	mΩ
$R_{DS(ON)}$ Q6			–	1.37	1.83	mΩ
$R_{DS(ON)}$ Q4		I_D = 80 A, V_{GS} = 12 V, T_J = 175°C (Note 4)	–	–	3.96	mΩ
$R_{DS(ON)}$ Q1	Module $R_{DS(ON)}$ for Q1−Q6 (Note 3)	I_D = 80 A, V_{GS} = 12 V	–	2.40	3.20	mΩ
$R_{DS(ON)}$ Q2			–	2.48	3.30	mΩ
$R_{DS(ON)}$ Q3			–	2.62	3.50	mΩ
$R_{DS(ON)}$ Q4			–	1.97	2.62	mΩ
$R_{DS(ON)}$ Q5			–	2.13	2.84	mΩ
$R_{DS(ON)}$ Q6			–	2.34	3.12	mΩ
V_{SD}	V_{GS} = 0 V, I_S = 80 A	V_{GS} = 0 V, I_S = 80 A	–	–	1.25	V

Product parametric performance is indicated in the Electrical Characteristics for the listed test conditions, unless otherwise noted. Product performance may not be indicated by the Electrical Characteristics if operated under different conditions.

2. All bare die have the same size and on resistance, However, on resistance values of each FETs could be different in the datasheet because of different access path inside the module. The value of Q4 is the rating of $R_{DS(ON)}$ of MOSFET of this module and be used for the power loss calculation because their values are close to the actual MOSFET $R_{DS(ON)}$ sensing by Kelvin pin.
3. Module Rdson means total resistance of the measurement path between Power terminals, referring to the resistance measurement methods table.
4. The maximum value is specified by design at T_J = 175°C. Product is not tested to this condition in production.

RESISTANCE MEASUREMENT METHODS

FETs	+ Force Pin#	– Force Pin#	+ Sense Pin#	– Sense Pin#
MOSFET $R_{DS(ON)}$ Q1	B+	Phase 1	Vbat	Sense Q1
MOSFET $R_{DS(ON)}$ Q2	B+	Phase 2	Vbat	Sense Q2
MOSFET $R_{DS(ON)}$ Q3	B+	Phase 3	Vbat	Sense Q3
MOSFET $R_{DS(ON)}$ Q4	Phase 1	GND	Sense Q1	Sense Q4
MOSFET $R_{DS(ON)}$ Q5	Phase 2	GND	Sense Q2	Sense Q5
MOSFET $R_{DS(ON)}$ Q6	Phase 3	GND	Sense Q3	Sense Q6
Module $R_{DS(ON)}$ Q1	B+	Phase 1	B+	Phase 1
Module $R_{DS(ON)}$ Q2	B+	Phase 2	B+	Phase 2
Module $R_{DS(ON)}$ Q3	B+	Phase 3	B+	Phase 3
Module $R_{DS(ON)}$ Q4	Phase 1	GND	Phase 1	GND
Module $R_{DS(ON)}$ Q5	Phase 2	GND	Phase 2	GND
Module $R_{DS(ON)}$ Q6	Phase 3	GND	Phase 3	GND

ELECTRICAL CHARACTERISTICS (T_J = 25°C; unless otherwise noted)

Symbol	Parameter	Conditions	Min	Typ	Max	Unit
DYNAMIC CHARACTERISTICS						
C_{iss}	Input Capacitance (Note 5)	V_{DS} = 50 V, V_{GS} = 0 V, f = 1 MHz	–	6970	–	pF
C_{oss}	Output Capacitance (Note 5)		–	3950	–	pF
C_{rss}	Reverse Transfer Capacitance (Note 5)		–	29	–	pF
R_g	Gate Resistance	f = 1 MHz	–	0.4	–	Ω
$Q_{g(tot)}$	Total Gate Charge	V_{GS} = 0 to 10 V, V_{DD} = 80 V, I_D = 80 A	–	101	–	nC
Q_{gs}	Gate to Source Gate Charge		–	34	–	nC
Q_{gd}	Gate to Drain “Miller” Charge		–	19	–	nC
SWITCHING CHARACTERISTICS						
$t_{d(on)}$	Turn–On Delay Time	V_{DD} = 50 V, I_D = 80 A, V_{GS} = 10 V, R_{GEN} = 6 Ω	–	46	–	ns
t_r	Rise Time		–	26	–	ns
$t_{d(off)}$	Turn–Off Delay Time		–	52	–	ns
t_f	Fall Time		–	15	–	ns

5. Reference typical characteristics of discrete FDBL86062–F085.

COMPONENTS

Components	Specification	Quantity	Size
MOSFET	100 V, bare die used in FDBL86062_F085	6	6.60 x 3.68 mm
RESISTOR	2.2 Ω, ESR10EZPF2R20	1	2.0 x 1.25 mm
CAPACITOR	100 V, 0.047 μF, GCJ188R92A473KA01D	2	1.6 x 0.8 mm
NTC Thermistor	100 kΩ, NCU18WF104D6SRB	1	1.6 x 0.8 mm

TYPICAL CHARACTERISTICS

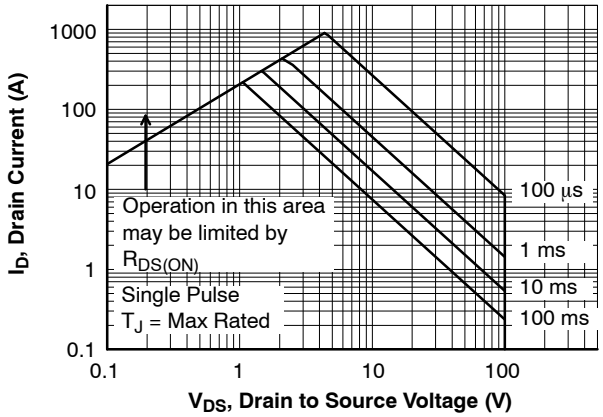

Figure 3. Forward Bias Safe Operating Area

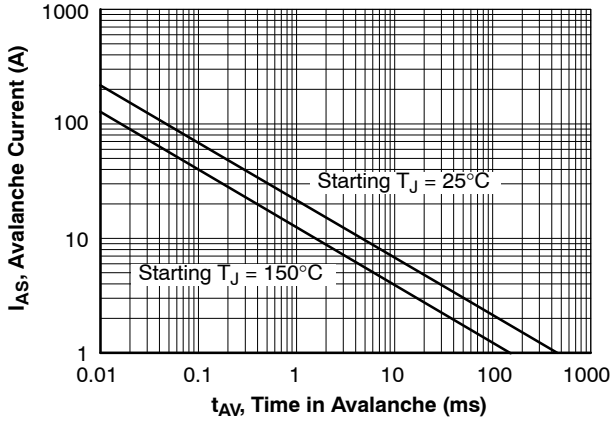

Figure 4. Unclamped Inductive Switching Capability

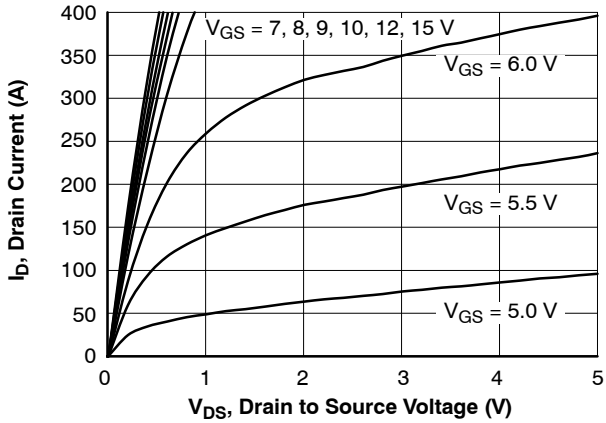

Figure 5. Saturation Characteristics

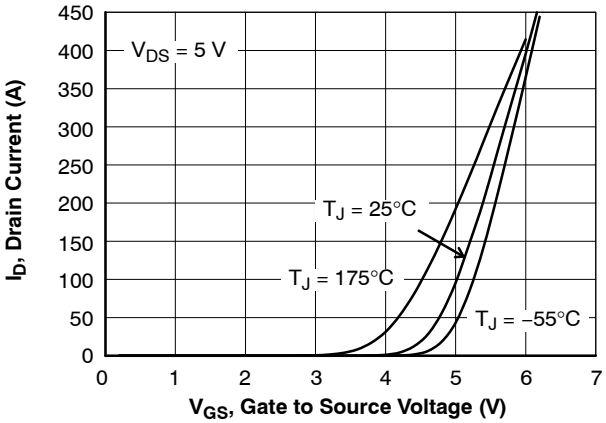

Figure 6. Transfer Characteristics

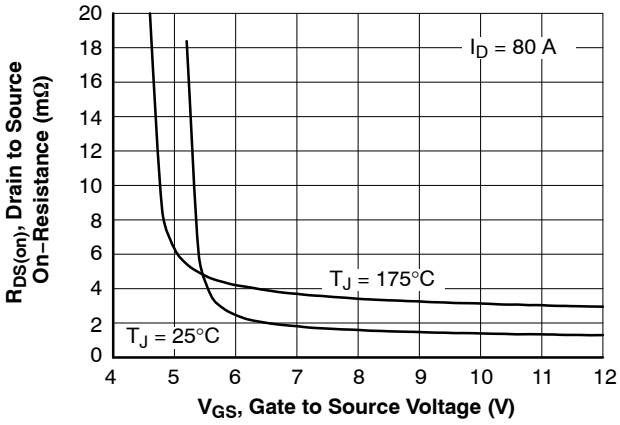

Figure 7. R_{DSON} vs. Gate Voltage

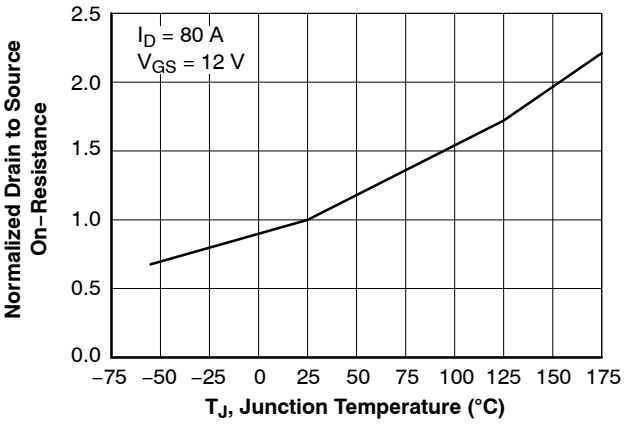

Figure 8. Normalized R_{DSON} vs. Junction Temperature

TYPICAL CHARACTERISTICS (CONTINUED)

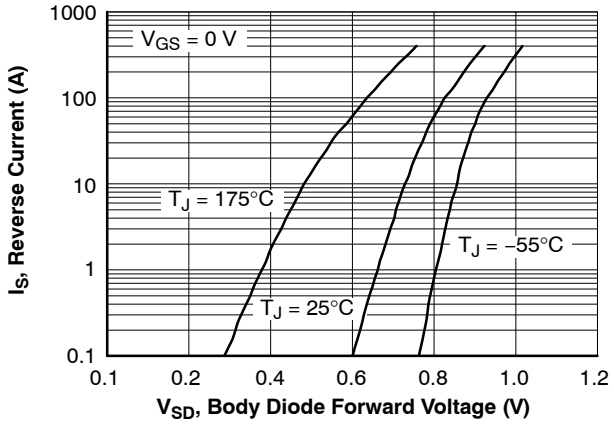

Figure 9. Forward Diode Characteristics

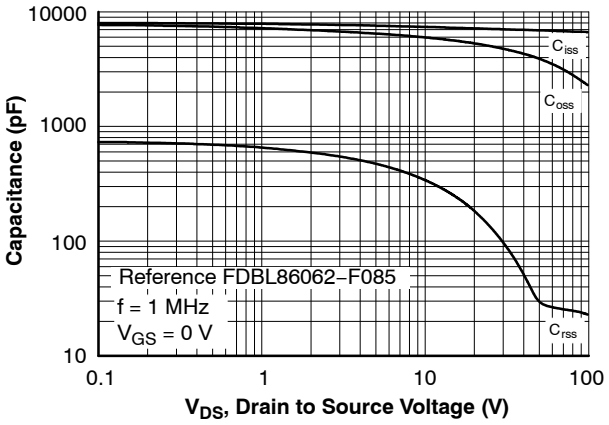

Figure 10. Capacitance vs. Drain to Source Voltage

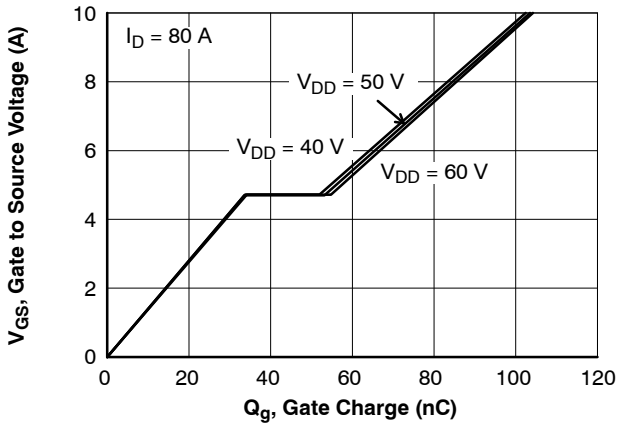

Figure 11. Gate Charge vs. Gate to Source Voltage

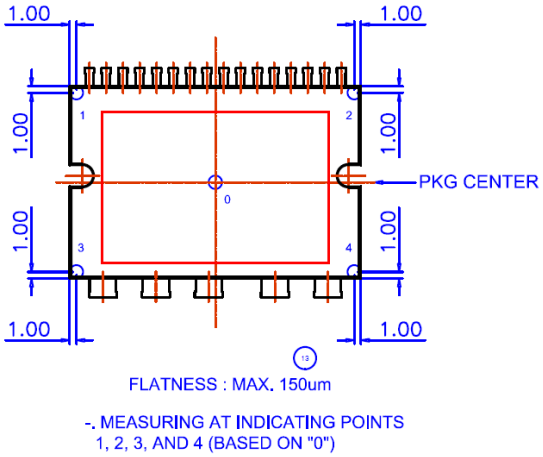

Figure 12. Flatness Measurement Position

MECHANICAL CHARACTERISTICS AND RATINGS

Parameter	Test Conditions	Min	Typ	Max	Unit
Device Flatness	Refer to Figure 12	0	–	150	μm
Mounting Torque	Mounting screw: M3, recommended 0.7 Nm	0.4	–	1.4 (Note 6)	Nm
Weight		–	21.2	–	g

6. Max Torque rating can be different by the type of screw, such as the screw head diameter, use or without use of Washer. In case of special screw mounting method is applied, contact to **onsemi** for the proper information of mounding condition.

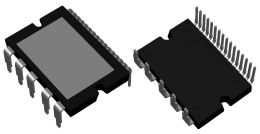

APM21 44.00x29.00x5.00, 8.00P
CASE MODBQ
ISSUE A

DATE 31 MAY 2024

NOTES:

1. DIMENSIONING AND TOLERANCING CONFORM TO ASME Y14.5−2018.
2. ALL DIMENSIONS ARE IN MILLIMETERS.
3. DIMENSIONS ARE EXCLUSIVE OF BURRS, MOLD FLASH AND TIE BAR EXTRUSIONS.

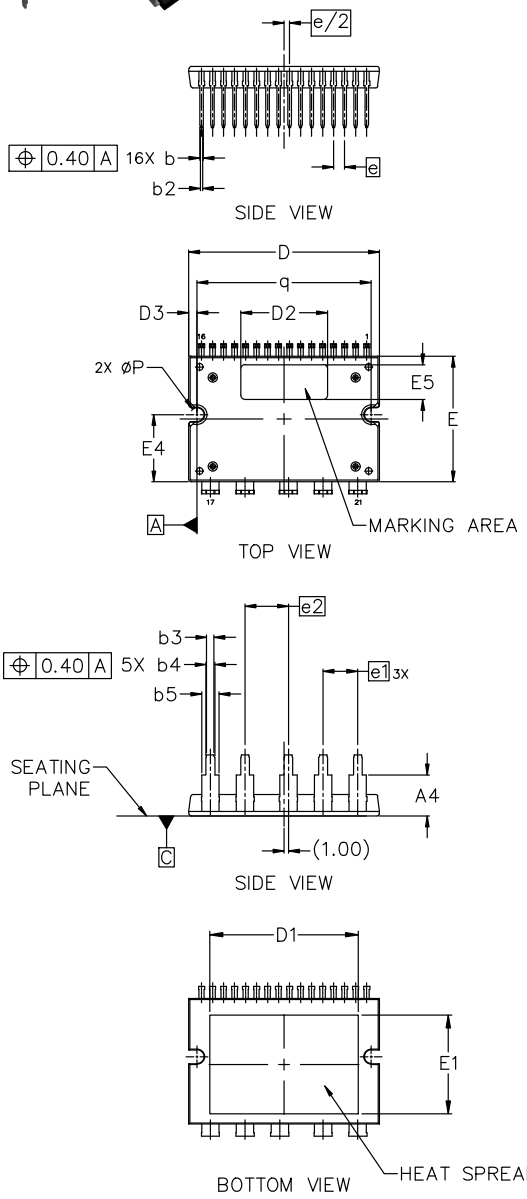

DIM	MILLIMETERS		
	MIN.	NOM.	MAX.
A	13.85	14.15	14.45
A2	4.90	5.00	5.10
A3	9.15 REF.		
A4	9.20	9.50	9.80
b	0.70	0.80	0.90
b2	0.30	0.50	0.70
b3	1.50	1.70	1.90
b4	1.90	2.00	2.10
b5	3.90	4.00	4.10
c	0.75	0.80	0.90
D	43.90	44.00	44.10
D1	34.00	34.30	34.60
D2	17.70	20.00	20.30
D3	1.80	1.90	2.00
E	28.90	29.00	29.10
E1	22.50	22.80	23.10
E2	17.90	18.30	18.70
E3	15.90	16.30	16.70
E4	15.40	15.50	15.60
E5	7.70	8.00	8.30
e	2.54 BSC		
e1	8.00 BSC		
e2	10.00 BSC		
øP	3.10	3.20	3.30
q	4.10	4.20	4.30

GENERIC MARKING DIAGRAM*

XXXXXXXXXXXXXXXX
ZZZ ATYWW
NNNNNNN

XXXX = Specific Device Code
ZZZ = Lot ID
AT = Assembly & Test Location
Y = Year
WW = Work Week
NNN = Serial Number

*This information is generic. Please refer to device data sheet for actual part marking. Pb−Free indicator, “G” or microdot “▪”, may or may not be present. Some products may not follow the Generic Marking.

DOCUMENT NUMBER:	98AON50521H	Electronic versions are uncontrolled except when accessed directly from the Document Repository. Printed versions are uncontrolled except when stamped “CONTROLLED COPY” in red.	
DESCRIPTION:	APM21 44.00x29.00x5.00, 8.00P		PAGE 1 OF 1

onsemi and onsemi are trademarks of Semiconductor Components Industries, LLC dba **onsemi** or its subsidiaries in the United States and/or other countries. **onsemi** reserves the right to make changes without further notice to any products herein. **onsemi** makes no warranty, representation or guarantee regarding the suitability of its products for any particular purpose, nor does **onsemi** assume any liability arising out of the application or use of any product or circuit, and specifically disclaims any and all liability, including without limitation special, consequential or incidental damages. **onsemi** does not convey any license under its patent rights nor the rights of others.

onsemi, onsemi, and other names, marks, and brands are registered and/or common law trademarks of Semiconductor Components Industries, LLC dba "**onsemi**" or its affiliates and/or subsidiaries in the United States and/or other countries. **onsemi** owns the rights to a number of patents, trademarks, copyrights, trade secrets, and other intellectual property. A listing of **onsemi**'s product/patent coverage may be accessed at www.onsemi.com/site/pdf/Patent−Marking.pdf. **onsemi** reserves the right to make changes at any time to any products or information herein, without notice. The information herein is provided "as−is" and **onsemi** makes no warranty, representation or guarantee regarding the accuracy of the information, product features, availability, functionality, or suitability of its products for any particular purpose, nor does **onsemi** assume any liability arising out of the application or use of any product or circuit, and specifically disclaims any and all liability, including without limitation special, consequential or incidental damages. Buyer is responsible for its products and applications using **onsemi** products, including compliance with all laws, regulations and safety requirements or standards, regardless of any support or applications information provided by **onsemi**. "Typical" parameters which may be provided in **onsemi** data sheets and/or specifications can and do vary in different applications and actual performance may vary over time. All operating parameters, including "Typicals" must be validated for each customer application by customer's technical experts. **onsemi** does not convey any license under any of its intellectual property rights nor the rights of others. **onsemi** products are not designed, intended, or authorized for use as a critical component in life support systems or any FDA Class 3 medical devices or medical devices with a same or similar classification in a foreign jurisdiction or any devices intended for implantation in the human body. Should Buyer purchase or use **onsemi** products for any such unintended or unauthorized application, Buyer shall indemnify and hold **onsemi** and its officers, employees, subsidiaries, affiliates, and distributors harmless against all claims, costs, damages, and expenses, and reasonable attorney fees arising out of, directly or indirectly, any claim of personal injury or death associated with such unintended or unauthorized use, even if such claim alleges that **onsemi** was negligent regarding the design or manufacture of the part. **onsemi** is an Equal Opportunity/Affirmative Action Employer. This literature is subject to all applicable copyright laws and is not for resale in any manner.

ADDITIONAL INFORMATION

TECHNICAL PUBLICATIONS:
Technical Library: www.onsemi.com/design/resources/technical−documentation
onsemi Website: www.onsemi.com

ONLINE SUPPORT: www.onsemi.com/support
For additional information, please contact your local Sales Representative at
www.onsemi.com/support/sales