EMD-BL-C-10 - Monitoring relay

2903521

https://www.phoenixcontact.com/us/products/2903521

Please be informed that the data shown in this PDF document is generated from our online catalog. Please find the complete data in the user documentation. Our general terms of use for downloads are valid.



Monitoring relay for monitoring single-phase currents of 0 ... 5 A AC or 0 ... 10 A AC, overcurrent/undercurrent or window, 1 changeover contact, with screw connection

Product description

Safety and system availability requirements are constantly on the increase – across all industries. Processes are becoming more and more complex, not only in machine building and the chemical industry but also in building technology. The demands placed on energy technology are also constantly on the rise.
It is only by continuously monitoring key network and system parameters that error-free and therefore cost-effective operation can be achieved. Electronic monitoring relays from the EMD series are available for a wide range of monitoring tasks so that the consequences of errors can be avoided or kept within limits.
The operating states are signaled via color LEDs and any errors that occur can be sent to a controller via a floating contact or can shut down a section of the system. All device versions are equipped with response delays so that measured values outside the set monitoring range can be briefly tolerated.

Commercial data

Item number	2903521
Packing unit	1 pc
Minimum order quantity	1 pc
Sales key	C440
Product key	DK6482
GTIN	4046356747257
Weight per piece (including packing)	79.1 g
Weight per piece (excluding packing)	79.1 g
Customs tariff number	85364900
Country of origin	AT

Technical data

Product properties

Product type	Current monitoring relay
Operating mode	100% operating factor
Mechanical service life	15x 10^6 cycles

Insulation characteristics

Insulation	Basic insulation
Overvoltage category	III
Pollution degree	2

Electrical properties

Service life electrical	1x 10^5 cycles
Mains type	1-phase
Rated insulation voltage	300 V (Supply circuit)
	250 V (Output circuit)
	300 V (Measuring circuit)
Rated surge voltage	4 kV

Supply

Supply voltage	230 V AC ±15 %
Supply voltage range	195.5 V AC ... 264.5 V AC
Nominal power consumption	5 VA (0.8 W)

Input data

Input name	Measuring input
Measured value	AC sine (48 Hz ... 63 Hz)
Input current range	0 A ... 5 A
	0 A ... 10 A
	Configurable via rotary switches
Overload capacity	13 A AC
Input resistance current input	3 mΩ
Frequency range	48 Hz ... 63 Hz
Maximum temperature coefficient	≤ 0.05 %
Setting range for response delay	0.1 s ... 10 s
Min. setting range	5 % ... 95 % (from I_N)
Max. setting range	10 % ... 100 % (from I_N)
Function	Overcurrent
	Undercurrent
	Window
Basic accuracy	≤ 5 % (of the nominal value)
Setting accuracy	± 5 % (of the nominal value)
Repeat accuracy	≤ 2 %

Recovery time	> 500 ms

Output data

Switching

Contact switching type	1 floating changeover contact
Maximum switching voltage	250 V AC (in acc. with IEC 60664-1)
Interrupting rating (ohmic load) max.	1250 VA (5 A / 250 V AC)
Output fuse	5 A (fast-blow)

Connection data

Connection method	Screw connection
Stripping length	8 mm
Conductor cross-section rigid	0.5 mm² ... 2.5 mm²
Conductor cross-section flexible	0.5 mm² ... 2.5 mm²
Conductor cross-section AWG	20 ... 14
Tightening torque	1 Nm ... 1 Nm

Signaling

Status display	LED (yellow)
Operating voltage display	Green LED
Error indication	Red LED

Dimensions

Width	17.5 mm
Height	89.5 mm
Depth	65.5 mm

Material specifications

Color	gray (RAL 7042)
Housing insulation material	Polyamide PA 6.6, self-extinguishing

Environmental and real-life conditions

Ambient conditions

Degree of protection (Housing)	IP40 (Housing)
Degree of protection (Connection terminal blocks)	IP20 (Connection terminal blocks)
Ambient temperature (operation)	-25 °C ... 55 °C
Ambient temperature (storage/transport)	-25 °C ... 70 °C
Climatic class	3K3 (in acc. with EN 60721)
Permissible humidity (operation)	15 % ... 85 %

Approvals

CE

Certificate	CE-compliant

UL, USA/Canada

Identification	UL/C-UL Listed UL 508

EMC data

Electromagnetic compatibility	Conformance with EMC directive
Low Voltage Directive	Conformance with Low Voltage Directive
Noise immunity	EN 61000-6-2

Noise emission

Standards/regulations	EN 61000-6-3

Standards and regulations

Standards/regulations	DIN EN 60947-5-1

Mounting

Mounting type	DIN rail mounting
Assembly note	on standard DIN rail NS 35 in accordance with EN 60715
Mounting position	any

Drawings

Block diagram

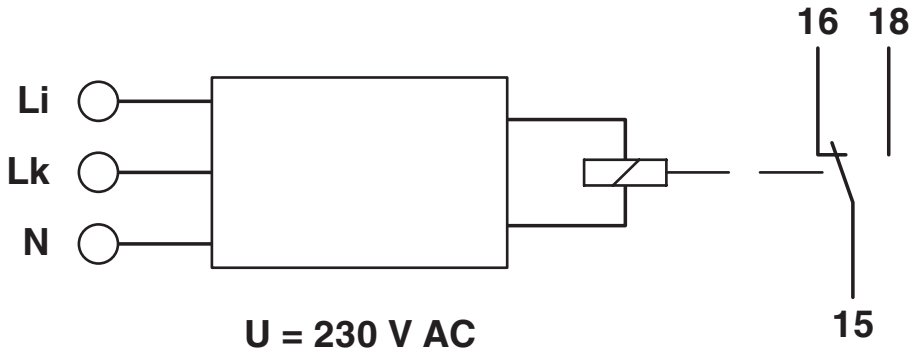

Approvals

To download certificates, visit the product detail page: https://www.phoenixcontact.com/us/products/2903521

EAC
Approval ID: RU*C-DE.*08.B.00010

UL Listed
Approval ID: FILE E 172140

cUL Listed
Approval ID: FILE E 172140

Classifications

ECLASS

ECLASS-13.0	27371802
ECLASS-15.0	27371802

ETIM

ETIM 9.0	EC001440

UNSPSC

UNSPSC 21.0	41113600

Environmental product compliance

EU RoHS

Fulfills EU RoHS substance requirements	Yes, No exemptions

China RoHS

Environment friendly use period (EFUP)	EFUP-E
	No hazardous substances above the limits

EU REACH SVHC

REACH candidate substance (CAS No.)	No substance above 0.1 wt%

Phoenix Contact 2025 © - all rights reserved
https://www.phoenixcontact.com

Phoenix Contact USA
586 Fulling Mill Road
Middletown, PA 17057, United States
(+717) 944-1300
info@phoenixcon.com