Mar.1.2024 Copyright 2024 HIROSE ELECTRIC CO., LTD. All Rights Reserved.
In case of consideration for using Automotive equipment / device which demand high reliability, kindly contact our sales window correspondents.

ELV. RoHS COMPLIANT

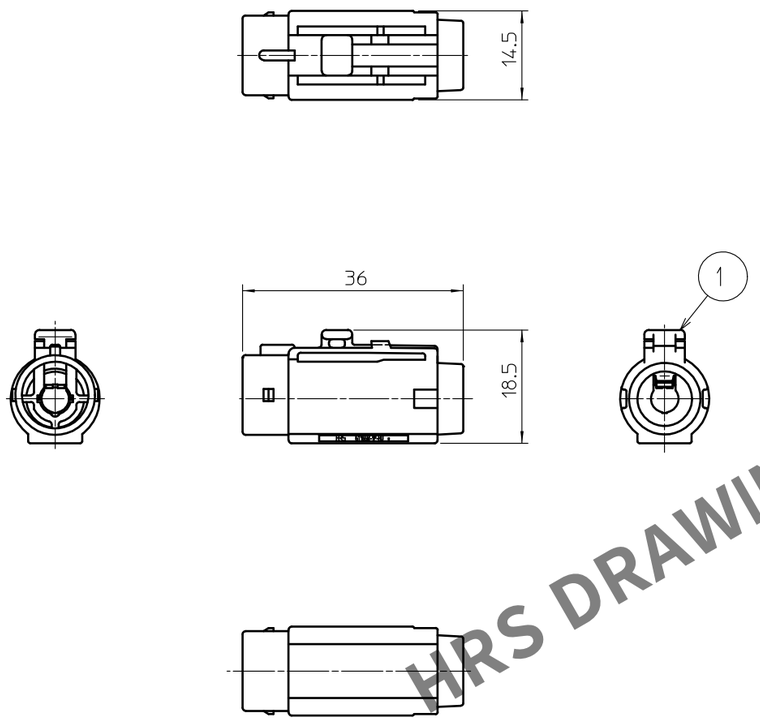

HRS DRAWING FOR REFERENCE

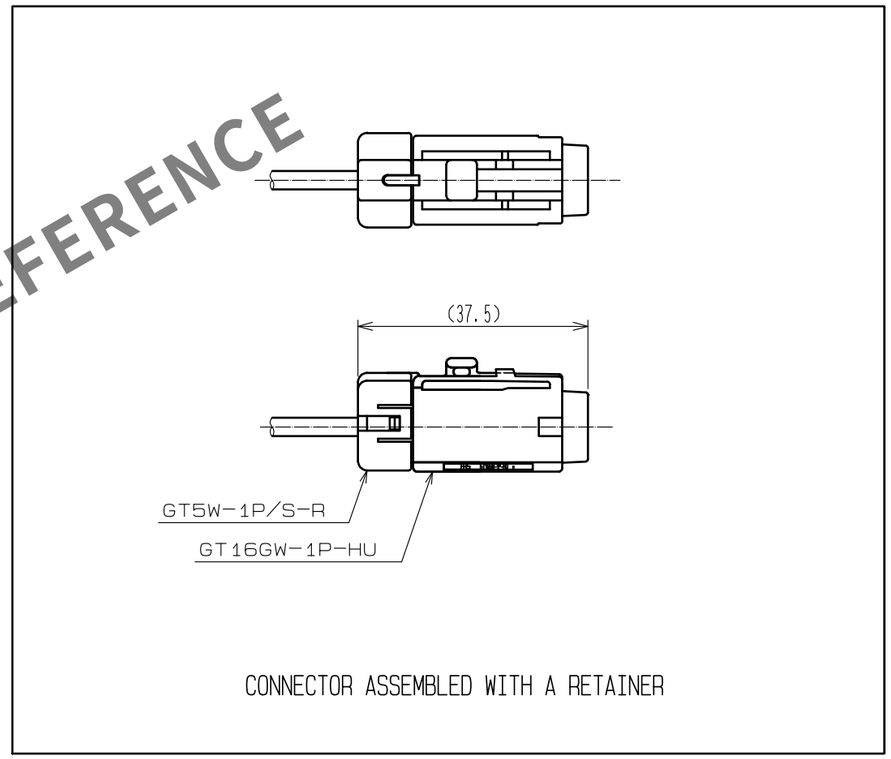

CONNECTOR ASSEMBLED WITH A RETAINER

NOTE1. A SUITABLE RETAINER FOR CABLE SIZE SHALL BE ASSEMBLED BEFORE USE.

NO.	MATERIAL	FINISH , REMARKS	NO.	MATERIAL	FINISH , REMARKS
1	PBT-M	BLACK			

UNITS	SCALE	COUNT	DESCRIPTION OF REVISIONS	DESIGNED	CHECKED	DATE
mm	1 : 1	0				

HIROSE ELECTRIC CO., LTD.

APPROVED	NH. NAKATA	15. 09. 03
CHECKED	KI. HIROKAWA	15. 09. 03
DESIGNED	ming. jiang	15. 08. 24
DRAWN	ming. jiang	15. 08. 24

DRAWING NO.	EDC-166652-00-00
PART NO.	GT16GW-1P-HU
CODE NO.	CL766-0077-4-00

0 1/1