1554723-1 ✔ ACTIVE

AMP | SUPERSEAL 1.0mm

TE Internal #: 1554723-1

Automotive Terminals, Receptacle, Mating Tab Width 1 mm [.039 in], 20 – 18 AWG Wire Size, .5 – .85 mm² Wire Size, Sealable, SUPERSEAL 1.0mm

View on TE.com >

Terminals & Splices > Automotive Terminals > SUPERSEAL Connector Contacts: 1.0 mm







Terminal Type: **Receptacle**

Mating Tab Width: **1 mm [.039 in]**

Wire Size: **.5 – .85 mm²**

Sealable: **Yes**

All SUPERSEAL Connector Contacts: 1.0 mm (6)

Features

Product Type Features

Receptacle Style	180°
Sealable	Yes

Body Features

Terminal Seal Type	Family Seal

Contact Features

Contact Size	1mm
Contact Fabrication	Stamped & Formed
Wire Contact Termination Area Plating Material	Tin
Crimp Type	F-Crimp
Terminal Type	Receptacle
Mating Tab Width	1 mm[.039 in]
Interface Plating	Tin (Sn)

Termination Features

Termination Method to Wire & Cable	Crimp
Product Terminates To	Wire

Dimensions

Wire Size	.5 – .85 mm²
Wire Size Search	18 AWG, 19 AWG, 20 AWG

Usage Conditions

Insulation Option	Uninsulated
Operating Temperature (Max)	80 °C, 85 °C, 90 °C, 100 °C, 105 °C, 110 °C, 120 °C, 125 °C[176 °F][185 °F][194 °F][212 °F][221 °F][230 °F][248 °F][257 °F]
Operating Temperature Range	-40 – 125 °C[-40 – 257 °F]

Operation/Application

Compatible With Wire Base Material	Copper

Packaging Features

Packaging Quantity	8000
Packaging Method	Reel

Product Compliance

For compliance documentation, visit the product page on TE.com>

EU RoHS Directive 2011/65/EU	Compliant
EU ELV Directive 2000/53/EC	Compliant
China RoHS 2 Directive MIIT Order No 32, 2016	No Restricted Materials Above Threshold
EU REACH Regulation (EC) No. 1907/2006	Current ECHA Candidate List: JAN 2024 (240) Candidate List Declared Against: JAN 2024 (240) Does not contain REACH SVHC
Halogen Content	Low Halogen - Br, Cl, F, I < 900 ppm per homogenous material. Also BFR/CFR/PVC Free
Solder Process Capability	Not reviewed for solder process capability

Product Compliance Disclaimer

This information is provided based on reasonable inquiry of our suppliers and represents our current actual knowledge based on the information they provided. This information is subject to change. The part numbers that TE has identified as EU RoHS compliant have a maximum concentration of 0.1% by weight in homogenous materials for lead, hexavalent chromium, mercury, PBB, PBDE, DBP, BBP, DEHP, DIBP, and 0.01% for cadmium, or qualify for an exemption to these limits as defined in the Annexes of Directive 2011/65/EU (RoHS2). Finished electrical and electronic equipment products

will be CE marked as required by Directive 2011/65/EU. Components may not be CE marked. Additionally, the part numbers that TE has identified as EU ELV compliant have a maximum concentration of 0.1% by weight in homogenous materials for lead, hexavalent chromium, and mercury, and 0.01% for cadmium, or qualify for an exemption to these limits as defined in the Annexes of Directive 2000/53/EC (ELV). Regarding the REACH Regulation, the information TE provides on SVHC in articles for this part number is based on the latest European Chemicals Agency (ECHA) 'Guidance on requirements for substances in articles' posted at this URL: https://echa.europa.eu/guidance-documents/guidance-on-reach

Compatible Parts



TE Part # 2151287-1
OCEAN-2.0-APPLICATOR-S-062F070O-RSM



TE Part # 2151287-2
OCEAN-2.0-APPLICATOR-S-062F070O-RSA



TE Part # 2290490-1
16POS,1.0 SERIES,REC HSG ASSY,SLD



TE Part # 2305570-1
Strip Terminal Cutter-Side Feed-No Crimp



TE Part # 5-2151287-1
OCEAN-2.0-APPLICATOR-S-062F070O-RSM



TE Part # 5-2151287-2
OCEAN-2.0-APPLICATOR-S-062F070O-RSA

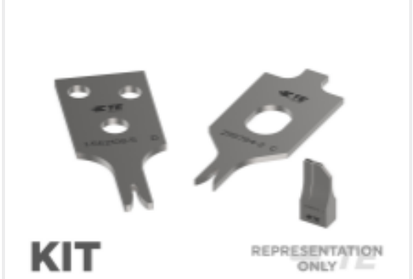

TE Part # 7-2151287-7
OCEAN_2.0_SPARE_PART_KIT-062F070O

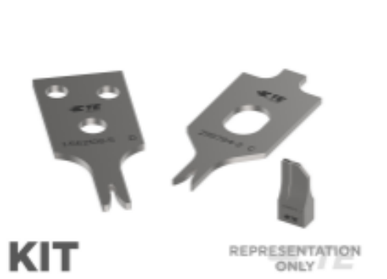

TE Part # 7-2836984-7
OC-062F-070O-CRIMPTOOLINGKIT



TE Part # 7-2151287-1
OCEAN-2.0-APPLICATOR-S-062F070O



TE Part # 7-2151287-2
OCEAN-2.0-APPLICATOR-S-062F070OA

Also in the Series | SUPERSEAL 1.0mm



Automotive Housings(14)



Automotive Terminals(6)



Connector Backshells(2)



Connector Seals & Cavity Plugs(1)

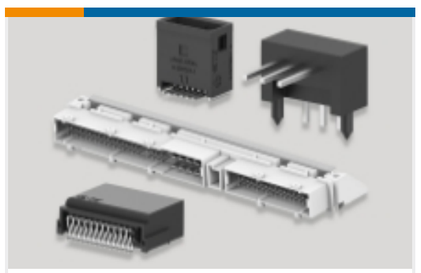

PCB Headers & Receptacles(33)

Customers Also Bought



TE Part #1-2236793-3
SMARTSEAL TERMINAL



TE Part #2305186-1
44POS,PR SPRNG CONTACT,REC HSG ASSY,SLD



TE Part #2203663-6
2X9 SEALED PLUG ASSY KEY B

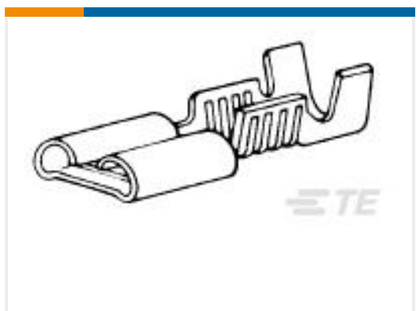

TE Part #880683-1
.250 SERIES FASTON



TE Part #2305881-1
CVTY PLUG,090 SERIES,CVTY DIA,1, GRY

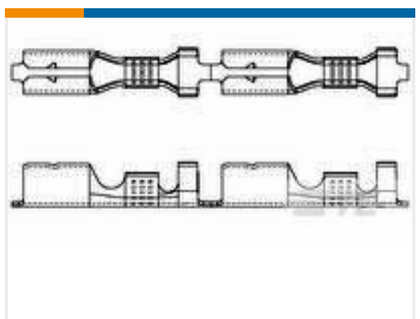

TE Part #626399-1
.140 SHUR PLUG REC.



TE Part #880622-1
TERMINAL REC. , SPECIAL TAB



TE Part #936184-3
BULB CONN 2P PLUG ASSY GRAY

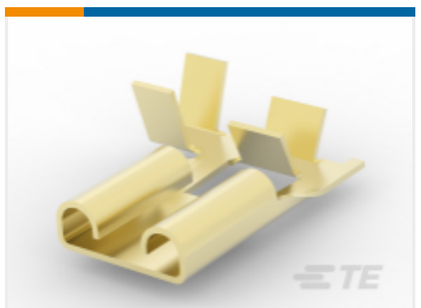

TE Part #1989960-1
FASTIN-ON .312 FLAG REC. SPECIAL



TE Part #CV16686001
RNF-3000-NR553-0-17MM

Documents

Product Drawings

1.0 SEALED RECEPTACLE CONTACT

Japanese

CAD Files

3D PDF

3D

Customer View Model

ENG_CVM_CVM_1554723-1_B.2d_dxf.zip

English

Customer View Model

ENG_CVM_CVM_1554723-1_B.3d_igs.zip

English

Customer View Model

ENG_CVM_CVM_1554723-1_B.3d_stp.zip

English

By downloading the CAD file I accept and agree to the Terms and Conditions of use.

Datasheets & Catalog Pages

ICT Terminals and Connectors Catalogue

English

Product Specifications

Application Specification

Japanese

Application Specification

Japanese

Instruction Sheets

Instruction Sheet (non U.S.)

Japanese