CUI DEVICES

MODEL: PPM-3-3511-SG | **DESCRIPTION:** DC POWER PLUG

FEATURES
- designed for over-molding
- spring contacts
- barrel groove
- 5A current rating



SPECIFICATIONS

parameter	conditions/description	min	typ	max	units
rated voltage				24	Vdc
rated current	at 30°C max. ΔT above ambient, center contact at 30°C max. ΔT above ambient, sleeve contact at 30°C max. ΔT above ambient, ring contact			5 5 1	A A A
contact resistance				30	mΩ
insulation resistance	at 500 Vdc	100			MΩ
voltage withstand	for 1 minute			500	Vac
operating temperature		-25		70	°C
operating humidity				85	%RH
RoHS compliant	yes				

MECHANICAL DRAWING

units: mm
tolerance: ±0.2 mm (unless otherwise noted)

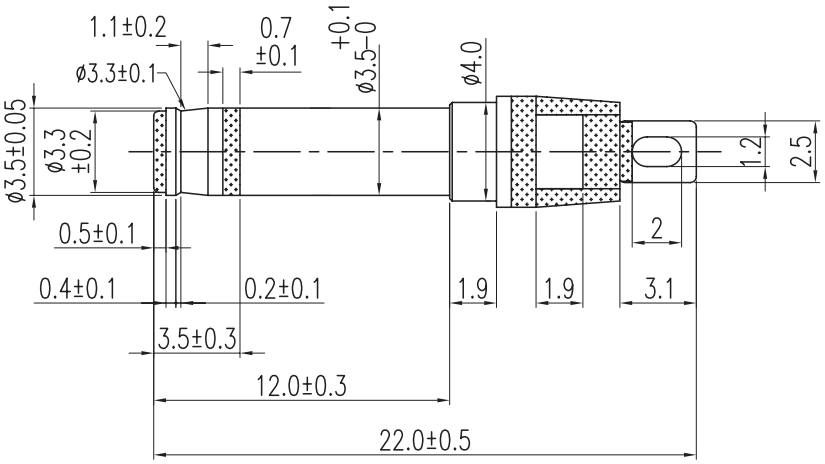

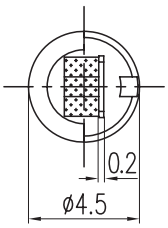

	DESCRIPTION	MATERIAL	PLATING
1	insulator	POM	
2	ring	brass	nickel
3	sleeve	brass	nickel
4	center contact	phosphor bronze	nickel
5	spacer	POM	

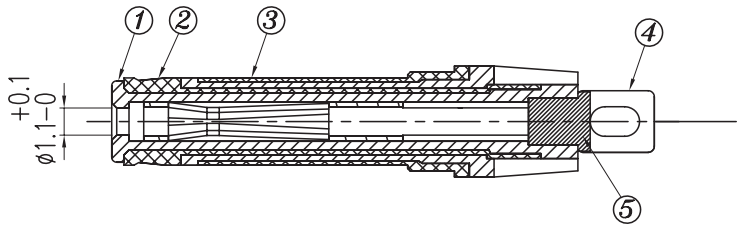

REVISION HISTORY

rev.	description	date
1.0	initial release	01/14/2013
1.01	brand update	11/07/2019

The revision history provided is for informational purposes only and is believed to be accurate.

CUI DEVICES

CUI Devices offers a one (1) year limited warranty. Complete warranty information is listed on our website.

CUI Devices reserves the right to make changes to the product at any time without notice. Information provided by CUI Devices is believed to be accurate and reliable. However, no responsibility is assumed by CUI Devices for its use, nor for any infringements of patents or other rights of third parties which may result from its use.

CUI Devices products are not authorized or warranted for use as critical components in equipment that requires an extremely high level of reliability. A critical component is any component of a life support device or system whose failure to perform can be reasonably expected to cause the failure of the life support device or system, or to affect its safety or effectiveness.

cuidevices.com