CUI DEVICES

SERIES: SJ2-2510X-SMT | **DESCRIPTION:** AUDIO JACK

FEATURES

- right angle
- low profile design
- reflow solder compatible
- surface mount



RoHS

PART NUMBER KEY

SJ2 - 2510 X X - SMT - TR

Base Number	# Conductors:
	2 = 2
	3 = 3
		Switch Options:
		A = no switch
		B= tip switch
			Package Style:
			SMT = surface mount
				Packaging:
				TR = Tape & Reel

SPECIFICATIONS

parameter	conditions/description	min	typ	max	units
rated input voltage			12		Vdc
rated input current				1	A
contact resistance	between terminal and mating plug between terminal in a closed circuit			50 30	mΩ mΩ
insulation resistance	at 500 Vdc	100			MΩ
voltage withstand	for 1 minute			500	Vac
insertion/withdrawal force		0.3		3	kg
operating temperature		-25		85	°C
life			5,000		cycles
flammability rating	UL94V-0				
RoHS	yes				

MECHANICAL DRAWING

units: mm
tolerance:
X.X ±0.25 mm
X.XX ±0.20 mm
X.XXX ±0.150 mm
PCB: ±0.05 mm

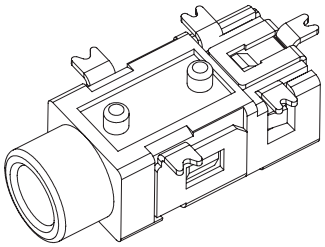

DESCRIPTION	MATERIAL	PLATING/COLOR
terminal 1	C5210 t=0.25	gold flash over nickel
terminal 2	C5210 t=0.25	gold flash over nickel
terminal 3	C5210 t=0.25	gold flash over nickel
terminal 10	C2680 t=0.25	gold flash over nickel
housing	PA10T (UL94V-0)	black

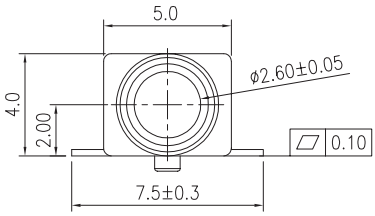

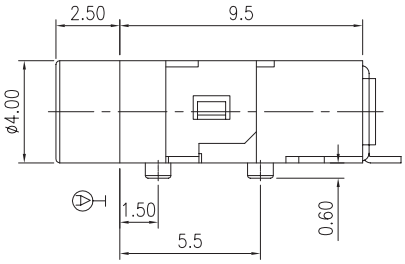

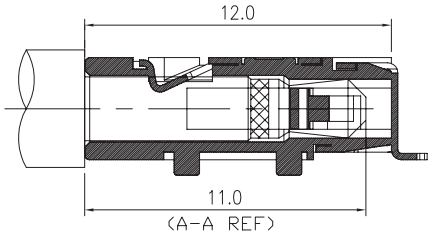

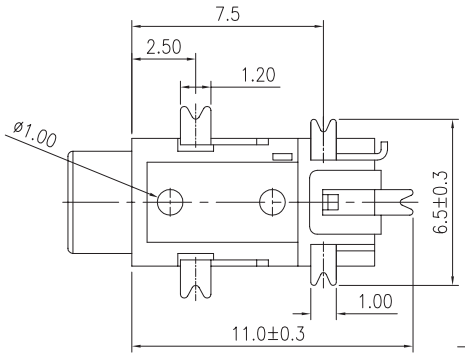

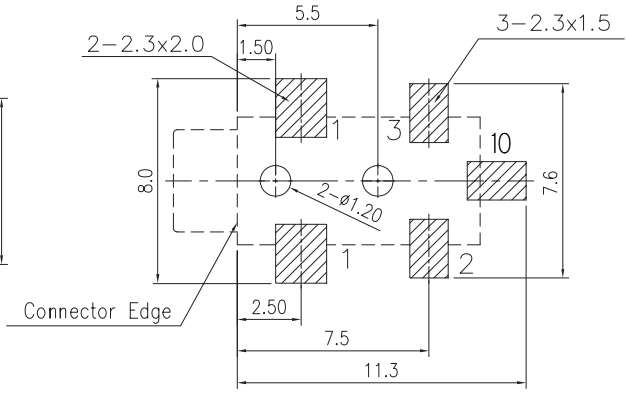

Recommended PCB Layout
Top View

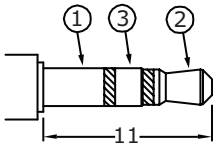

Ø2.5 MATING PLUG

Model No.	SJ2-25102B-SMT	SJ2-25103A-SMT
Schematic	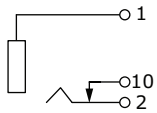	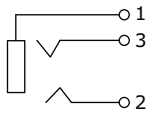
PIN		
1	sleeve	sleeve
2	tip	tip
3	NP	ring
10	tip switch	NP

SOLDERABILITY

parameter	conditions/description	min	typ	max	units
reel storage	5~25°C, 20~75% humidity				
reflow soldering	see reflow profile	255	260		°C

Note: 1. CUI Devices recommends usage of the product within 24 hours after T&R is opened. After 24 hours, CUI Devices recommends drying the parts prior to use.

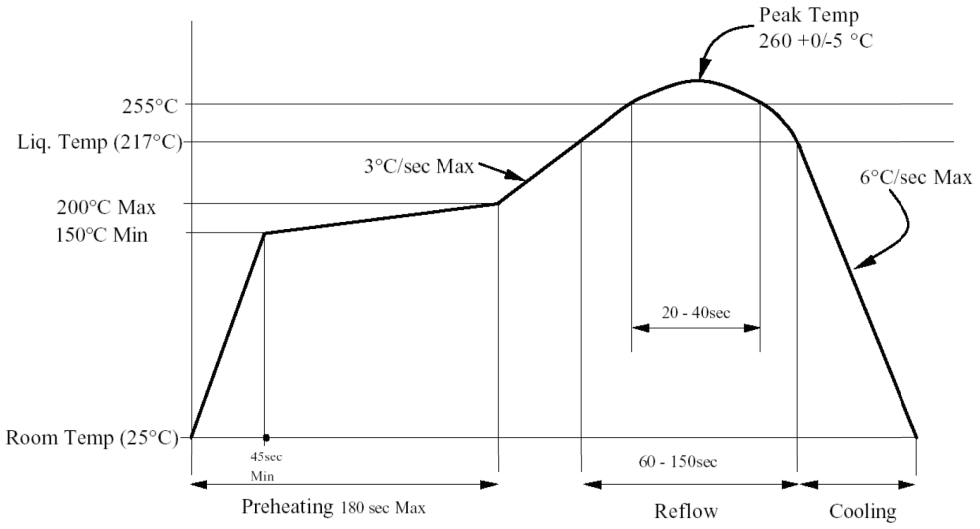

PACKAGING

units: mm

Reel Size: Ø330 mm
Reel QTY: 1,000 pcs per reel

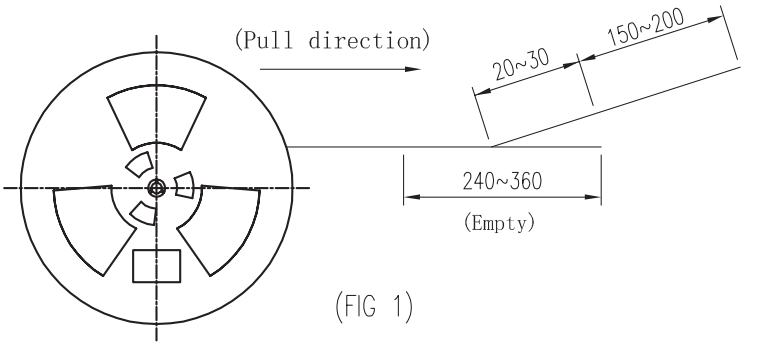

(FIG 1)

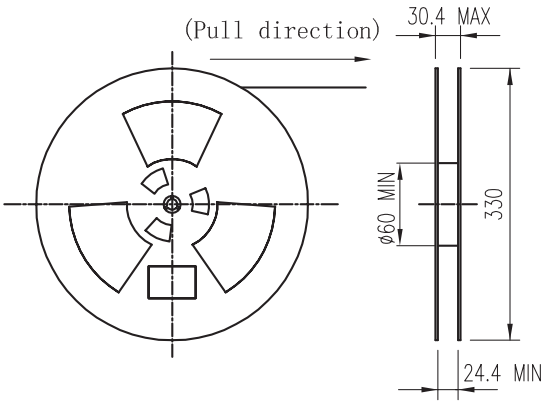

(FIG 3)

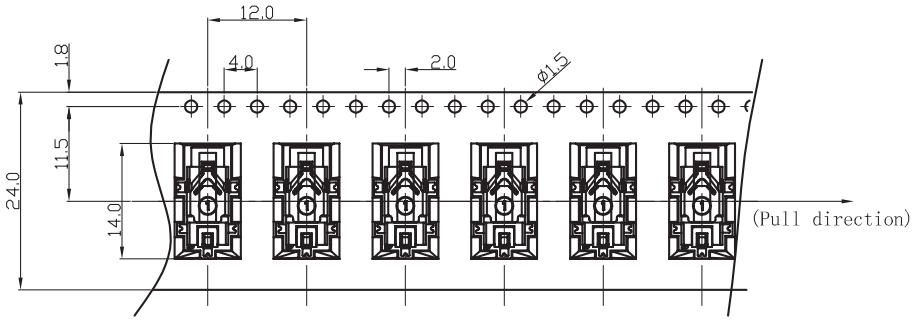

(FIG 2)

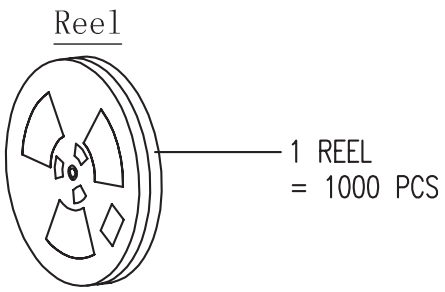

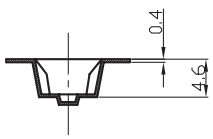

REVISION HISTORY

rev.	description	date
1.0	initial release	12/02/2016
1.01	added storage and drying conditions	06/06/2017
1.02	brand update	10/04/2019
1.03	discontinued models SJ2-25103B-SMT-TR & SJ2-25102A-SMT-TR; logo, datasheet style update	08/18/2022
1.04	product reengineered for improved manufacturability and production yield, see PCN for details	06/15/2023

The revision history provided is for informational purposes only and is believed to be accurate.

CUI Devices offers a one (1) year limited warranty. Complete warranty information is listed on our website.

CUI Devices reserves the right to make changes to the product at any time without notice. Information provided by CUI Devices is believed to be accurate and reliable. However, no responsibility is assumed by CUI Devices for its use, nor for any infringements of patents or other rights of third parties which may result from its use.

CUI Devices products are not authorized or warranted for use as critical components in equipment that requires an extremely high level of reliability. A critical component is any component of a life support device or system whose failure to perform can be reasonably expected to cause the failure of the life support device or system, or to affect its safety or effectiveness.

cuidevices.com