MP6605C

4-Channel, Low-Side Driver with I²C Interface

DESCRIPTION

The MP6605C is a 4-channel, low-side driver IC with an I²C interface. The device integrates low-side MOSFET (LS-FET) switches and high-side clamp diodes to drive inductive loads. It is typically used for unipolar stepper motors and solenoid drivers.

The MP6605C operates from a supply voltage of up to 60V, and can deliver an output current (I_{OUT}) up to 1.5A, depending on the PCB design and thermal conditions. The maximum voltage on the motor driver's output pins is 60V.

Internal safety features include over-current protection (OCP), under-voltage lockout (UVLO), and over-temperature protection (OTP).

The MP6605C is available in a QFN-24 (4mmx4mm) package.

FEATURES

- Wide 4.5V to 60V Input Voltage (V_{IN}) Range
- 60V Maximum Winding Clamp Voltage
- Four Low-Side MOSFETs (LS-FETs) and Clamp Diodes
- 350mΩ MOSFET On Resistance
- 1.5A (One Channel On) or 700mA (Four Channels On) Maximum Output Current (I_{OUT})
- Over-Current Protection (OCP)
- Under-Voltage Lockout Protection (UVLO)
- Over-Temperature Protection (OTP)
- Fault Indication Output
- No Control Power Supply Required
- I²C Interface
- 3.3V and 5V Compatible Logic Supply
- Available in a QFN-24 (4mmx4mm) Package

APPLICATIONS

- Unipolar Stepper Motors
- Solenoid Drivers

All MPS parts are lead-free, halogen-free, and adhere to the RoHS directive. For MPS green status, please visit the MPS website under Quality Assurance. "MPS", the MPS logo, and "Simple, Easy Solutions" are registered trademarks of Monolithic Power Systems, Inc. or its subsidiaries.

MPS Proprietary Information. Patent Protected. Unauthorized Photocopy and Duplication Prohibited.
© 2022 MPS. All Rights Reserved.

TYPICAL APPLICATION

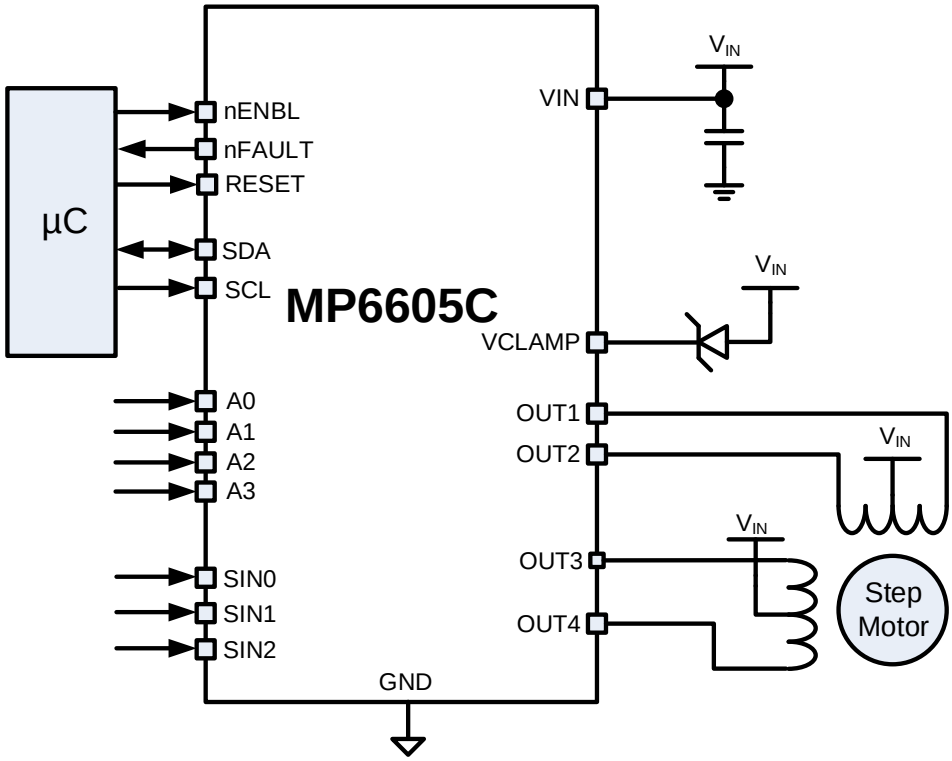

MPS Proprietary Information. Patent Protected. Unauthorized Photocopy and Duplication Prohibited.
© 2022 MPS. All Rights Reserved.

ORDERING INFORMATION

Part Number*	Package	Top Marking	MSL Rating
MP6605CGR	QFN-24 (4mmx4mm)	*See Below*	1

* For Tape & Reel, add suffix -Z (e.g. MP6605CGR-Z).

TOP MARKING

MPSYWW
M6605C
LLLLLL

MPS: MPS prefix
Y: Year code
WW: Week code
M6605C: Part number
LLLLLL: Lot number

PACKAGE REFERENCE

TOP VIEW

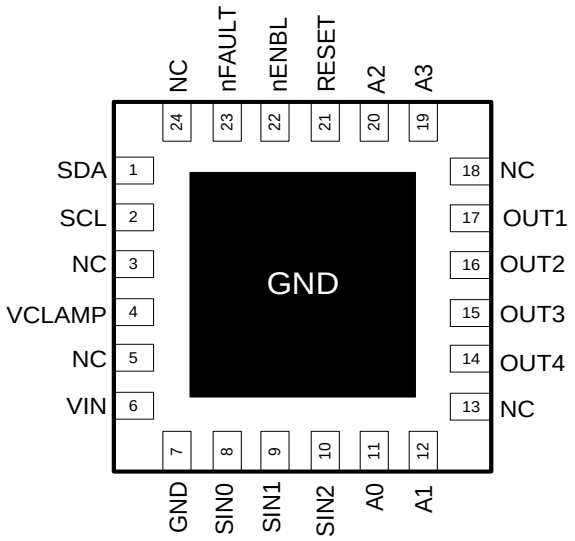

QFN-24 (4mmx4mm)

MPS Proprietary Information. Patent Protected. Unauthorized Photocopy and Duplication Prohibited.
© 2022 MPS. All Rights Reserved.

PIN FUNCTIONS

Pin #	Name	Description
6	VIN	**Input supply voltage.** Decouple the VIN pin with a minimum 100nF ceramic capacitor connected to GND. Additional bulk capacitance may be required.
4	VCLAMP	**High-side clamp.** Connect the VCLAMP pin to VIN with a TVS or Zener diode to clamp the leakage inductance spike.
7, exposed pad	GND	**Power ground.**
1	SDA	**I²C data.**
2	SCL	**I²C clock.**
11	A0	**Address setting input.** Connect the A0~A3 pins to ground or leave them open to configure the I²C interface address. These pins have an internal pull-up resistor, and are connected to an internal supply voltage (about 6V).
12	A1	
20	A2	
19	A3	
8	SIN0	**Sensor input 0.** The SIN0 pin has an internal pull-down resistor.
9	SIN1	**Sensor input 1.** The SIN1 pin has an internal pull-down resistor.
10	SIN2	**Sensor input 2.** The SIN2 pin has an internal pull-down resistor.
21	RESET	**Device reset input.** Drive the RESET pin active high to initialize the digital logic. RESET has an internal pull-down resistor.
22	nENBL	**Enable input.** Drive the nENBL pin to logic high to disable the outputs; drive nENBL to logic low to enable the outputs. The state of nENBL does not affect the I²C interface. nENBL has an internal pull-down resistor.
23	nFAULT	**Fault indication.** The nFAULT pin is an open-drain output that requires an external pull-up resistor when it is used. If a fault condition occurs, nFAULT is driven low.
17	OUT1	**Output terminal 1.**
16	OUT2	**Output terminal 2.**
15	OUT3	**Output terminal 3.**
14	OUT4	**Output terminal 4.**

ABSOLUTE MAXIMUM RATINGS (1)

Supply voltage (V_{IN}) .....-0.3V to +65V
OUTx voltage (V_{OUTx}) .....-0.7V to +65V
Clamp voltage (V_{CLAMP}) .....-0.7V to +65V
A0, A1, A2, A3 .....-0.3V to +9V
All other pins to GND .....-0.3V to +6.5V
Continuous power dissipation (T_A = 25°C) (2)
..... 2.9W
Storage temperature..... -55°C to +150°C
Junction temperature ..... +150°C
Lead temperature (solder) ..... +260°C

ESD Ratings

Human body model (HBM) …….. ±2kV
Charged device model (CDM) …… ±2kV

Recommended Operating Conditions (3)

Supply voltage (V_{IN}) .....4.5V to 60V
Output voltage (V_{OUTx}).....0V to 60V
Maximum output current for LS-FETs (I_{LSX})…….
……1.5A
Maximum output current for high-side diodes (I_{HSX}) …….. 1.5A at duty cycle <20%
Operating junction temp (T_J).... -40°C to +125°C

Thermal Resistance (4) θ_{JA} θ_{JC}

QFN-24 (4mmx4mm)..... 42..... 9.... °C/W

Notes:

1) Exceeding these ratings may damage the device.
2) The maximum allowable power dissipation is a function of the maximum junction temperature, T_J (MAX), the junction-to-ambient thermal resistance, θ_{JA}, and the ambient temperature, T_A. The maximum allowable continuous power dissipation at any ambient temperature is calculated by P_D (MAX) = (T_J (MAX) - T_A) / θ_{JA}. Exceeding the maximum allowable power dissipation can produce an excessive die temperature, and the regulator may go into thermal shutdown. Internal thermal shutdown circuitry protects the device from permanent damage.
3) The device is not guaranteed to function outside of its operating conditions.
4) Measured on JESD51-7, 4-layer PCB.

MPS Proprietary Information. Patent Protected. Unauthorized Photocopy and Duplication Prohibited.
© 2022 MPS. All Rights Reserved.

ELECTRICAL CHARACTERISTICS

V_{IN} = 12V, V_{CLAMP} = 36V, T_A = 25°C, unless otherwise noted.

Parameter	Symbol	Condition	Min	Typ	Max	Units
Power Supply						
Input supply voltage	V_{IN}		4.5	12 or 24	60	V
Clamp voltage	V_{CLAMP}		V_{IN}		60	V
Quiescent current	I_Q	V_{IN} = 24V, nENBL = 0, with no load		1.2	5	mA
Internal MOSFETs						
Output on resistance	$R_{DS(ON)}$	V_{IN} = 24V, I_{OUT} = 700mA, T_J = 25°C		350	500	mΩ
		V_{IN} = 24V, I_{OUT} = 700mA, T_J = 85°C			800	mΩ
High-side diode forward voltage	V_{FWD_HS}	I_{OUT} = 700mA			1.1	V
Body diode forward voltage	V_{FWD_LS}	I_{OUT} = 700mA			1.1	V
Control Logic						
Input logic low threshold	V_{IL}				0.7	V
Input logic high threshold	V_{IH}		2.3			V
Input logic hysteresis	ΔV_{IH}			560		mV
Logic input current	$I_{IN(H)}$	V_{IH} = 5V			20	µA
	$I_{IN(L)}$	V_{IL} = 0.8V			5	µA
Internal pull-up current (A0~A3)	I_{PU}	To V_{PU}		40		µA
Internal pull-up voltage (A0~A3)	V_{PU}				8.1	V
nFAULT, SDA, SDO Outputs (Open-Drain Outputs)						
Output low voltage	V_{OL}	I_{OUT} = 5mA			0.5	V
Output high leakage current	I_{OH}	V_{OUT} = 3.3V			1	µA
Protection Circuits						
Under-voltage lockout (UVLO) rising threshold	V_{IN_RISE}			3.4	4.5	V
Over-current (OC) trip level	I_{OCP}		1.5	4		A
OC deglitch time	t_{OCP}			3.5		µs
OC retry time	t_{OCR}			2.5		mS
Thermal shutdown (5)	T_{TSD}			165		°C
Thermal shutdown hysteresis (5)	ΔT_{TSD}			25		°C
Output enable time (5)	t_{EN}			3.3		µs

Note:

5) Guaranteed by design.

MPS Proprietary Information. Patent Protected. Unauthorized Photocopy and Duplication Prohibited.
© 2022 MPS. All Rights Reserved.

I²C TIMING CHARACTERISTICS (6)

V_{IN} = 24V, T_A = 25°C, unless otherwise noted.

Parameter	Symbol	Condition	Min	Typ	Max	Units
SCL clock frequency	f_{SCL}		10		500	kHz
Bus free time	t_{BUF}	Between stop and start condition	0.5			µs
Holding time after repeated start command	t_{HD_STA}	After this period, the first clock is generated	0.26			µs
Repeated start command set-up time	t_{SU_STA}		0.26			µs
Stop condition set-up time	t_{SU_STO}		0.26			µs
Data hold time	t_{HD_DAT}		0			ns
Data set-up time	t_{SU_DAT}		50			ns
Clock low time	t_{LOW}		0.5			µs
Clock high time	t_{HIGH}		0.26		50	µs
Clock/data falling time	t_F				120	ns
Clock/data rising time	t_R				120	ns

Note:

6) Not subject to production testing. Specified by design.

I²C TIMING DIAGRAM

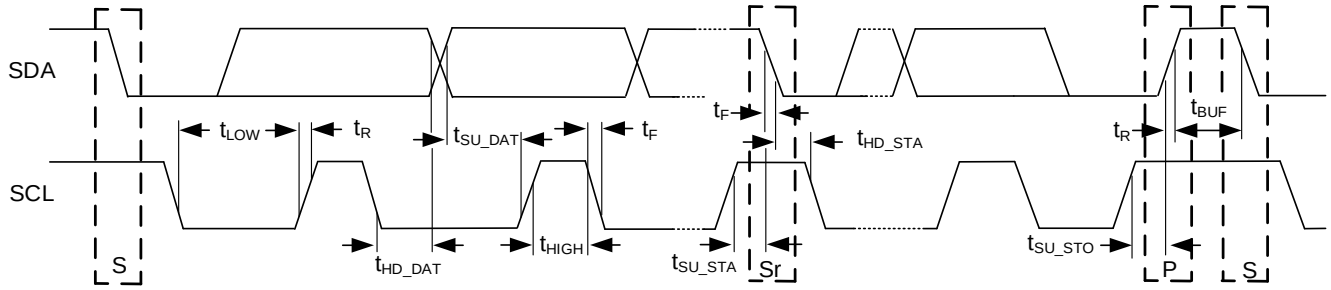

S = Start Command
Sr = Repeated Start Command
P = Stop Command

MPS Proprietary Information. Patent Protected. Unauthorized Photocopy and Duplication Prohibited.
© 2022 MPS. All Rights Reserved.

TYPICAL CHARACTERISTICS

Quiescent Current vs. Supply Voltage

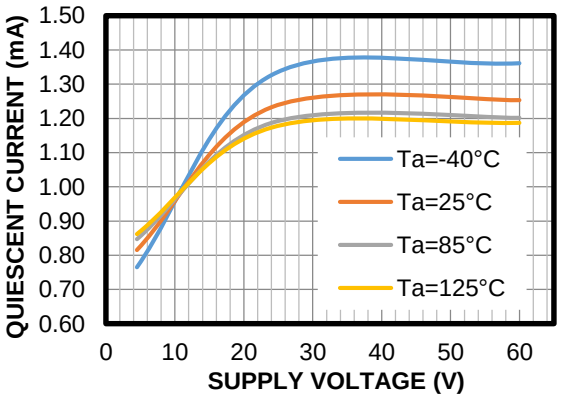

Quiescent Current vs. Temperature

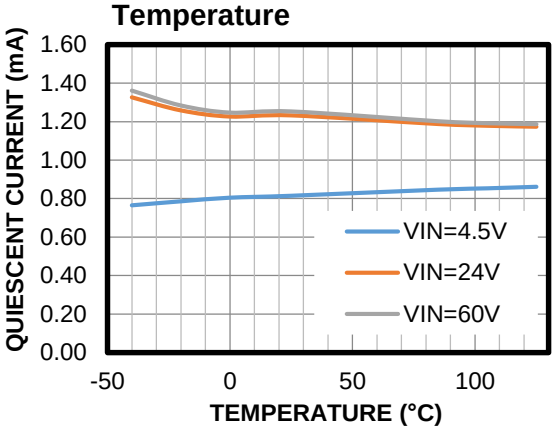

$R_{DS(ON)}$ vs. Temperature

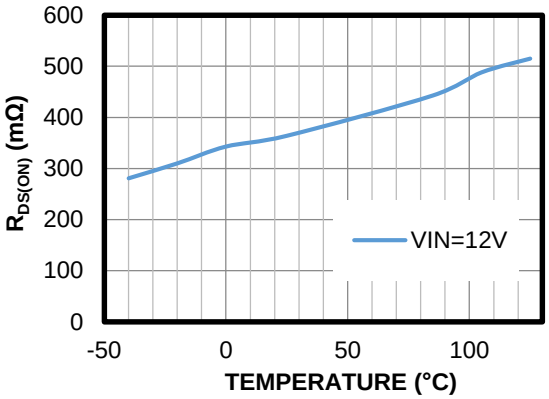

MPS Proprietary Information. Patent Protected. Unauthorized Photocopy and Duplication Prohibited.
© 2022 MPS. All Rights Reserved.

TYPICAL PERFORMANCE CHARACTERISTICS

V_{IN} = 12V, VCLAMP connected to VIN with 24V TVS diode, I_{OUT} = 700mA, T_A = 25°C, resistor and inductor load: R = 33Ω, L = 1.5mH/channel, unless otherwise noted.

Normal Operation

f_{SW} = 1kHz

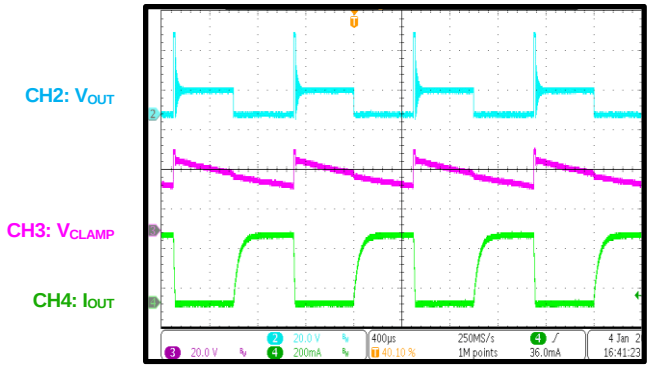

Start-Up through VIN

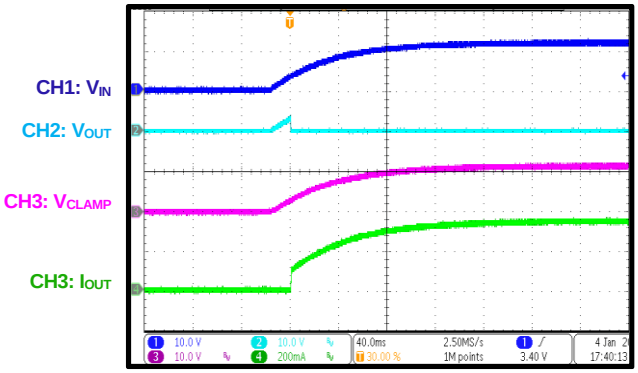

Shutdown through VIN

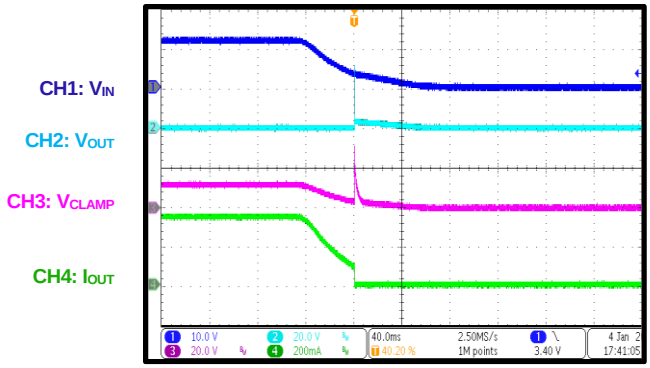

SCP

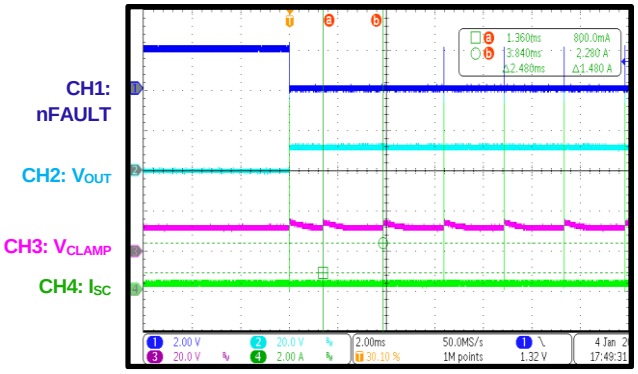

Chip Enabled

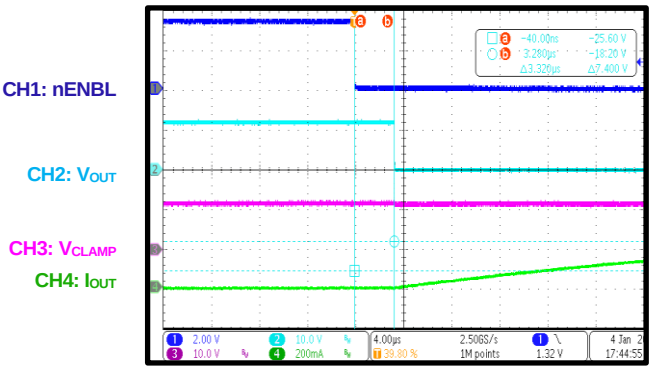

Chip Disabled

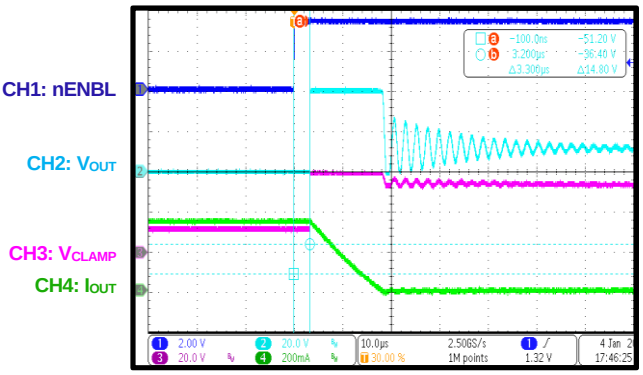

MPS Proprietary Information. Patent Protected. Unauthorized Photocopy and Duplication Prohibited.
© 2022 MPS. All Rights Reserved.

FUNCTIONAL BLOCK DIAGRAM

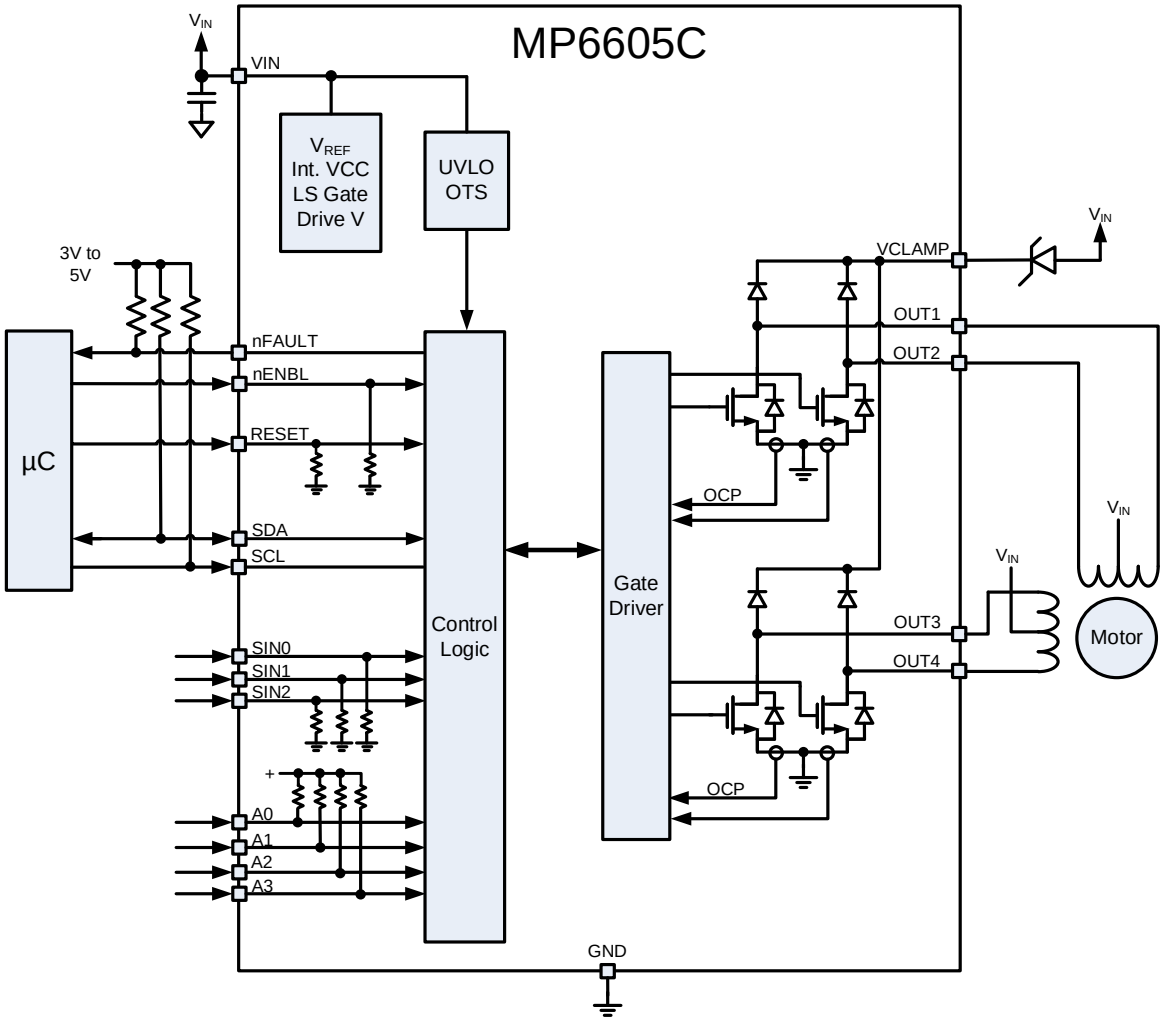

Figure 1: Functional Block Diagram

MPS Proprietary Information. Patent Protected. Unauthorized Photocopy and Duplication Prohibited.
© 2022 MPS. All Rights Reserved.

OPERATION

The MP6605C is a 4-channel low-side driver that integrates four N-channel power MOSFETs and four clamp diodes with 1.5A of current capability per channel. The MP6605C operates across a wide 4.5V to 60V supply voltage range.

The MP6605C is designed to drive inductive loads, including unipolar stepper motors and solenoids.

Unipolar Stepper Operation

A unipolar stepper motor has two windings. These windings are driven by currents that are 90° out of phase. Each winding has a center tap that is connected to the power source. The current is driven through the winding in a push-pull fashion, meaning that the device alternately pulls one side of the winding to ground, then it pulls the other side. This reverses the current, which then reverses the magnetic field.

After a MOSFET turns off due to the inductance of the winding, current continues to flow through the other side of the winding. The current flows from ground to the power supply through the opposite MOSFET body diode.

Leakage Inductance Clamp (VCLAMP)

A unipolar stepper motor has a leakage inductance because the two halves of the winding are not perfectly coupled. If a MOSFET turns off, the voltage exceeds 2 x V_{IN} for a short period. This leakage inductance spike must be clamped to prevent over-voltage (OV) conditions on the MOSFETs.

If a switch turns off when driving a solenoid connected to the VIN pin, current must continue to flow until the magnetic field decays.

These currents flow through internal diodes at each output to a common VCLAMP pin. Generally, the VCLAMP pin is connected to a transient voltage suppressor that limits the voltage on the output pins to a maximum of 60V, regardless of VIN voltage.

If the outputs do not need to exceed the VIN pin's supply, connect VCLAMP to VIN.

RESET and nENBL Operation

Driving the RESET pin active high initializes the digital logic. The I²C interface and outputs are disabled while RESET is active.

The nENBL pin controls the output drivers. When nENBL is low, the outputs are enabled, and signals on the I²C interface are recognized. When nENBL is high, the outputs are disabled, and the I²C interface remains operational. nENBL has an internal pull-down resistor.

Address Input Pins

The four address input pins (A0~A3) are intended to either be connected to ground or floating. These pins are connected to an internal voltage (about 6V) via an internal pull-up resistor. This means that these pins require special consideration when they are driven by a logic output.

Logic Input Pins

The remaining logic input pins have Schmitt trigger inputs with a hysteresis. These pins are compatible with 3V or 5V logic.

Fault Reporting

The MP6605C provides an nFAULT pin that reports if a fault condition (such as over-current protection (OCP), over-voltage protection (OVP), or over-temperature protection (OTP)) occurs. nFAULT is an open-drain output that is driven low when a fault condition occurs. If the fault condition is removed, nFAULT is pulled high by an external pull-up resistor.

Over-Current Protection (OCP)

OCP circuitry limits the current through the MOSFETs by disabling the gate driver. If the device exceeds the OC limit threshold for longer than the OC deglitch time, all of the MOSFETs are disabled, and nFAULT is driven low. The driver automatically re-enables itself after about 2.5ms.

Input Under-Voltage Lockout (UVLO) Protection

If V_{IN} falls below the under-voltage lockout (UVLO) threshold voltage, all circuitry in the device is disabled, and the internal logic is reset. Operation resumes when V_{IN} rises above the UVLO threshold.

Over-Temperature Protection (OTP)

If the die temperature exceeds its safe limits, the outputs are disabled, and nFAULT is driven low.

MPS Proprietary Information. Patent Protected. Unauthorized Photocopy and Duplication Prohibited.
© 2022 MPS. All Rights Reserved.

Normal operation resumes automatically when the die temperature falls to a safe level.

I²C INTERFACE

The I²C interface is a two-wire, bidirectional serial interface consisting of a data line (SDA) and a clock line (SCL). The lines are pulled to a bus voltage externally when they are idle.

The MP6605C interface is an I²C slave that supports a maximum clock frequency up to 400kHz.

I²C Update Sequence

The MP6605C requires a start command, valid I²C address, and data byte. After receiving each byte, the MP6605C acknowledges the request by pulling the SDA line low during the high period of a single clock pulse.

A valid I²C address selects the MP6605C. The MP6605C performs an update on the falling edge of the LSB byte.

Start and Stop Commands

The start and stop commands are signaled by the master device, and they signify the beginning and the end of the I²C transfer, respectively. A start (S) command is defined as the SDA signal transitioning from high to low while SCL is high. A stop (P) command is defined as the SDA signal transitioning from low to high while SCL is high (see Figure 2).

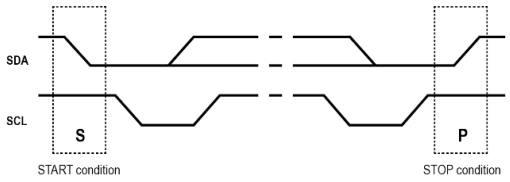

Figure 2: Start and Stop Commands

Address Byte

After the start command, the I²C master sends an address byte. The address byte consists of a 7-bit address field, and one bit (WR) that indicates if the transfer is a read (WR = 1) or a write (WR = 0).

The four LSBs of the address are set by the A0~A3 input pins, which means that a maximum of 16 devices can be connected to the same I²C bus.

The address byte is followed by an acknowledge bit (see Figure 3).

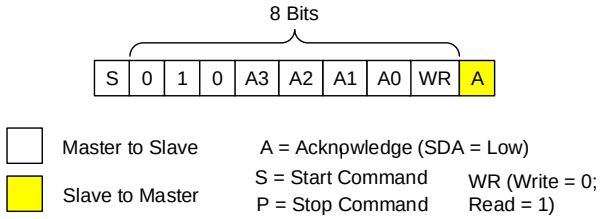

Figure 3: Address Byte

Data Byte

After the address is acknowledged, an 8-bit data byte is sent, followed by an acknowledge bit (see Figure 4). The state of the WR bit in the address byte determines if the data is written from the master to the MP6605C, or if data is read from the MP6605C.

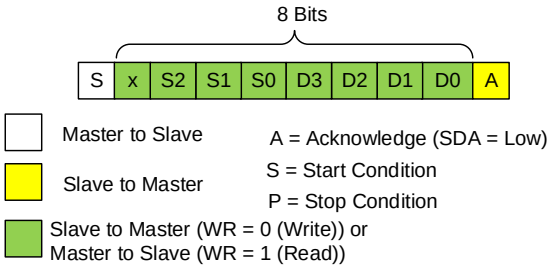

Figure 4: Data Byte

The D0~D3 bits can be written to or read. When they are written to 1, the corresponding output bit(s) is driven low. The S0~S2 bits are read-only, and they correspond to the state of the S0~S2 input pins.

MPS Proprietary Information. Patent Protected. Unauthorized Photocopy and Duplication Prohibited.
© 2022 MPS. All Rights Reserved.

APPLICATION INFORMATION

Selecting External Components

A 100nF, X7R ceramic bypass capacitor must be placed at the VIN pin. An additional, 4.7µF minimum ceramic capacitor should be placed nearby. If the device is located far from the power source, additional electrolytic bulk capacitance may be needed.

When the current is turned off, the VCLAMP pin dissipates the energy in an inductive load. Depending on the application, VCLAMP can be connected directly to VIN, or it can be connected to VIN with a TVS diode.

Connecting VCLAMP to VIN is equivalent to connecting a diode from each output to VIN. The TVS diode allows the voltage on the output pins to exceed V_{IN} until the TVS diode breaks down. This increased voltage allows the current through the load to decay faster, which is generally required for high-speed operation with unipolar stepper motors.

The TVS diode's breakdown voltage should be selected such that the VCLAMP pin remains below its maximum ratings. Note that the TVS diode's breakdown voltage may be higher than expected as this voltage is rated at low currents.

For VIN supply voltages up to 24V, it is recommended to use a 24V TVS diode. This ensures that the VCLAMP pin voltage stays within its limits.

PCB Layout Guidelines

Efficiency PCB layout is vital for stable operation. For the best results, refer for Figure 5 and follow the guidelines below:

1. Place the bypass capacitors near the IC.
2. If used, place the VCLAMP TVS diode near the IC.
3. Place thermal vias under the exposed pad to help move heat from the device to a plane on an inner layer, or on the back side of the PCB.

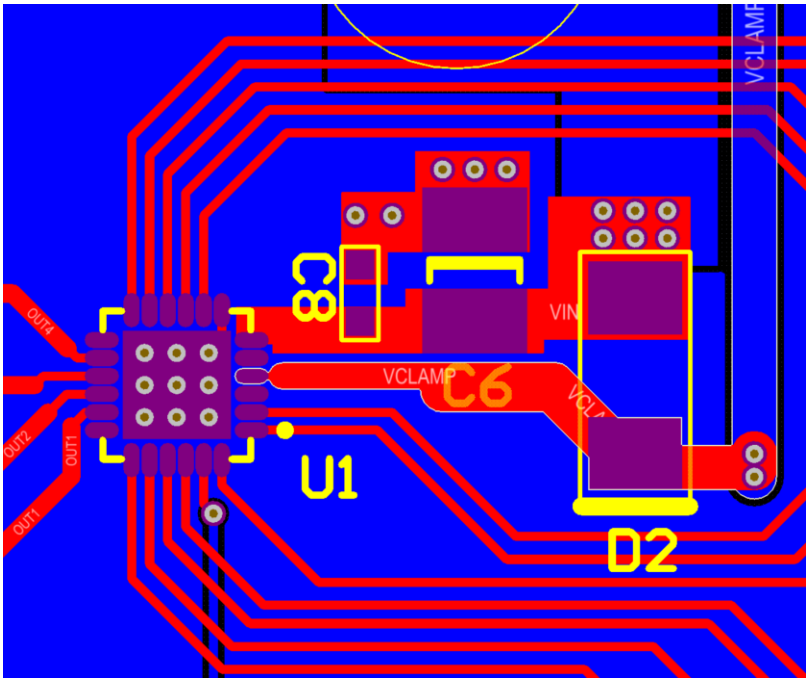

Figure 5: Recommended PCB Layout

MPS Proprietary Information. Patent Protected. Unauthorized Photocopy and Duplication Prohibited.
© 2022 MPS. All Rights Reserved.

TYPICAL APPLICATION CIRCUIT

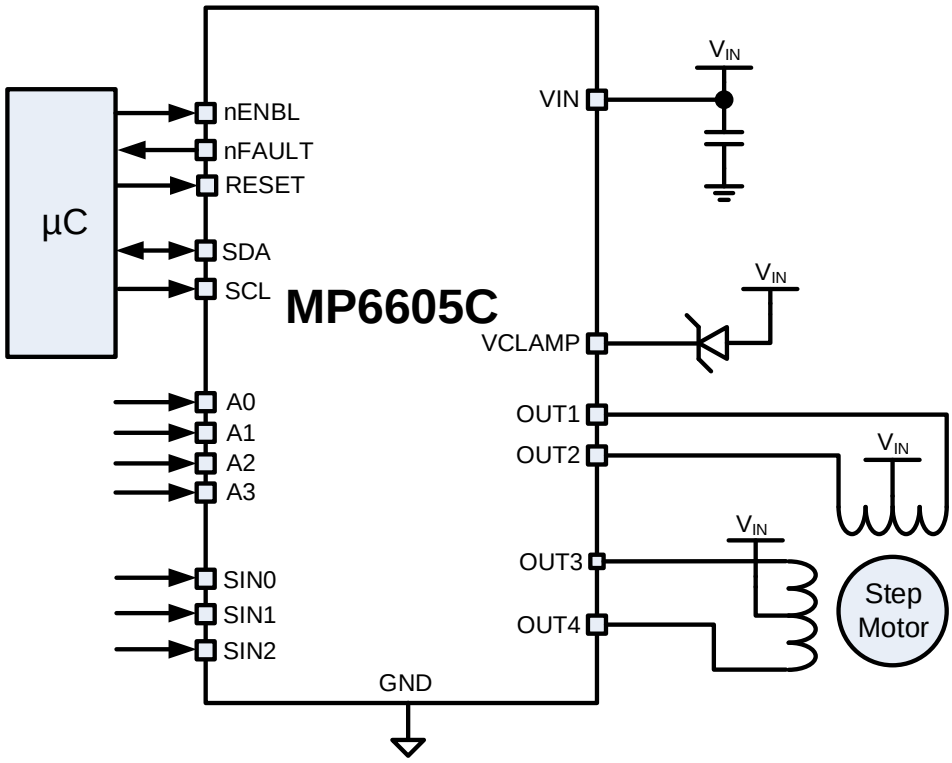

Figure 6: Typical Application Circuit

MPS Proprietary Information. Patent Protected. Unauthorized Photocopy and Duplication Prohibited.
© 2022 MPS. All Rights Reserved.

PACKAGE INFORMATION

QFN-24 (4mmx4mm)

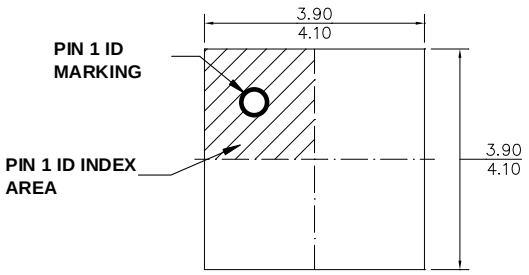

TOP VIEW

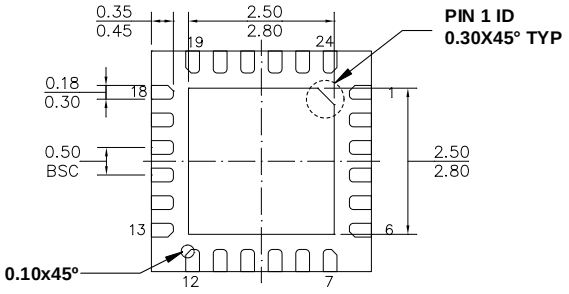

BOTTOM VIEW

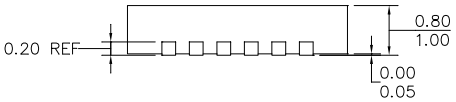

SIDE VIEW

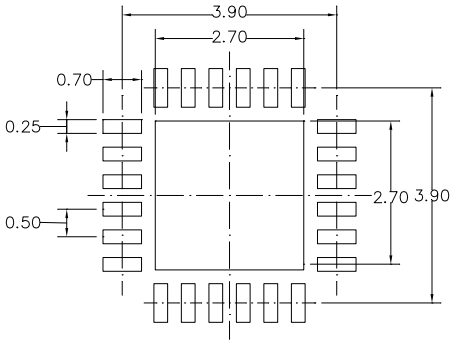

RECOMMENDED LAND PATTERN

NOTE:

1) ALL DIMENSIONS ARE IN MILLIMETERS.
2) EXPOSED PADDLE SIZE DOES NOT INCLUDE MOLD FLASH.
3) LEAD COPLANARITY SHALL BE 0.08 MILLIMETERS MAX.
4) JEDEC REFERENCE IS MO-220
5) DRAWING IS NOT TO SCALE.

MPS Proprietary Information. Patent Protected. Unauthorized Photocopy and Duplication Prohibited.
© 2022 MPS. All Rights Reserved.

CARRIER INFORMATION

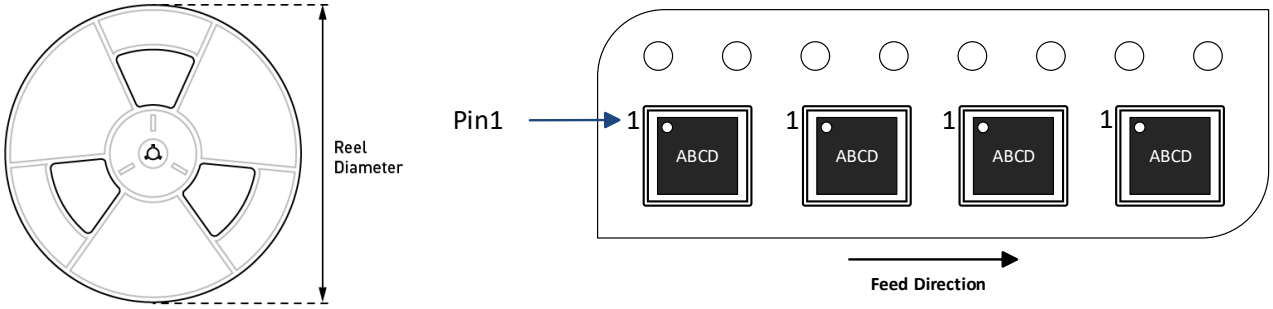

Part Number	Package Description	Quantity/ Reel	Quantity/ Tube	Quantity/ Tray	Reel Diameter	Carrier Tape Width	Carrier Tape Pitch
MP6605CGR-Z	QFN-24 (4mmx4mm)	5000	N/A	N/A	13in	12mm	8mm

MPS Proprietary Information. Patent Protected. Unauthorized Photocopy and Duplication Prohibited.
© 2022 MPS. All Rights Reserved.

REVISION HISTORY

Revision #	Revision Date	Description	Pages Updated
1.0	7/11/2022	Initial Release	-

Notice: The information in this document is subject to change without notice. Please contact MPS for current specifications. Users should warrant and guarantee that third-party Intellectual Property rights are not infringed upon when integrating MPS products into any application. MPS will not assume any legal responsibility for any said applications.

MPS Proprietary Information. Patent Protected. Unauthorized Photocopy and Duplication Prohibited.
© 2022 MPS. All Rights Reserved.