CAPAROC PM S-R - Power module

1115661

https://www.phoenixcontact.com/us/products/1115661

Please be informed that the data shown in this PDF document is generated from our online catalog. Please find the complete data in the user documentation. Our general terms of use for downloads are valid.



Power module with status output and reset input for supplying the CAPAROC circuit breaker system with 12 or 24 V DC. For DIN rail installation via the CAPAROC current rails.

Your advantages

- The benchmark that you can customize by selecting single signals and resets all the way to PROFINET communication
- Particularly easy operation for everyone with tool-free assembly, direct feed-in to the busbar, and clear operating states
- Exceptionally easy design-in thanks to the comprehensive digital data packet and PROFINET function blocks

Commercial data

Item number	1115661
Packing unit	1 pc
Minimum order quantity	1 pc
Sales key	CL11
Product key	CLA231
GTIN	4063151040635
Weight per piece (including packing)	130 g
Weight per piece (excluding packing)	91.9 g
Customs tariff number	85363030
Country of origin	DE

Technical data

Notes

General

Note	LABS release – in accordance with test specification VW PV 3. 10.7:2005-0
	When connecting the conductor, make sure that the CAPAROC modules are not pulled apart due to tensile force. Gaps must not be created between the modules.

Product properties

Product type	Device circuit breakers
Product family	CAPAROC
Number of slots	2

Insulation characteristics

Protection class	III
Pollution degree	2

Electrical properties

General

Operating voltage	10 V DC ... 30 V DC
Rated voltage	12 V DC
	24 V DC
Rated current I_N	45 A DC (Total current input)
Rated surge voltage	0.5 kV
Tripping method	E (electronic)
Dielectric strength	35 V DC (Load circuit)
Efficiency	> 99 %
Closed circuit current I_0	typ. 9 mA (no load at 24 V)
Power dissipation	typ. 0.22 W (no load at 24 V)
	< 1.5 W (in nominal operation at 24 V and 45 A)
Temperature derating	45 A (Total current at 40°C)
	30 A (Total current at 65 °C)
MTBF (IEC 61709, SN 29500)	18886912.65 h (at 25 °C with 21 % load)
	5907048.64 h (at 40°C with 34.25% load)
	933563.97 h (at 40°C with 100% load)
Voltage drop	0.03 V (at 45 A)

Reset

Input voltage range	7 V DC ... 30 V DC (Reset with falling edge)
Current consumption	typ. 0.5 mA (at 24 V DC)
Pulse length	≥ 50 ms
Stripping length	8 mm

Conductor cross section rigid	0.2 mm² ... 1.5 mm²
Conductor cross section AWG	24 ... 16
Conductor cross section, flexible, with ferrule, with plastic sleeve	0.2 mm² ... 0.75 mm²
Conductor cross section flexible, with ferrule without plastic sleeve	0.2 mm² ... 1.5 mm²

Status output

Output voltage	max. 30 V DC (Input voltage ±5% in the event of no error)
	0 V DC (Error)
Output current	max. 20 mA
Stripping length	8 mm
Conductor cross section rigid	0.2 mm² ... 1.5 mm²
Conductor cross section AWG	24 ... 16
Conductor cross section, flexible, with ferrule, with plastic sleeve	0.2 mm² ... 0.75 mm²
Conductor cross section flexible, with ferrule without plastic sleeve	0.2 mm² ... 1.5 mm²

Status output

Output voltage	max. 30 V DC (Input voltage ±5% when I >80% at at least one channel)
Output current	max. 20 mA
Stripping length	8 mm
Conductor cross section rigid	0.2 mm² ... 1.5 mm²
Conductor cross section AWG	24 ... 16
Conductor cross section, flexible, with ferrule, with plastic sleeve	0.2 mm² ... 0.75 mm²
Conductor cross section flexible, with ferrule without plastic sleeve	0.2 mm² ... 1.5 mm²

Connection data

Main circuit IN+

Connection method	Push-in connection
Stripping length	18 mm
Conductor cross section rigid	0.5 mm² ... 16 mm²
Conductor cross section AWG	20 ... 8
Conductor cross section, flexible, with ferrule, with plastic sleeve	0.5 mm² ... 16 mm²
Conductor cross section flexible, with ferrule without plastic sleeve	0.5 mm² ... 16 mm²

Main circuit IN-

Connection method	Push-in connection
Stripping length	18 mm
Conductor cross section rigid	0.5 mm² ... 16 mm²
Conductor cross section AWG	20 ... 8
Conductor cross section, flexible, with ferrule, with plastic sleeve	0.5 mm² ... 16 mm²
Conductor cross section flexible, with ferrule without plastic sleeve	0.5 mm² ... 16 mm²

Interfaces

Maximum system extension	≤ 20 (CAPAROC modules alignable)

Signaling

Power (PWR) LED green	lit (with no channel errors)
	lit (Supply voltage in the nominal range)
	flashing (3 x on deactivation of programming lock)
Power (PWR) LED red	lit (Supply voltage outside the nominal range)
Power (PWR) LED yellow	flashing (3 x on activation of programming lock)

Dimensions

Dimensional drawing	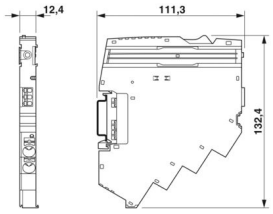
Width	12.4 mm
Height	132.4 mm
Depth	111.3 mm (incl. DIN rail 7.5 mm)

Material specifications

Color	light grey (RAL 7035)
Material	PA 6
	PA 6
	PA 6
	PC
Flammability rating according to UL 94	V-0

Environmental and real-life conditions

Ambient conditions

Degree of protection	IP20
Ambient temperature (operation)	-30 °C ... 65 °C
Ambient temperature (storage/transport)	-40 °C ... 70 °C
Altitude	≤ 4000 m (amsl)
Humidity test	96 h, 95 % RH, 40 °C
Shock (operation)	30g (11 ms period, half-sine shock pulse, according to IEC 60068-2-27)
	25g (6 ms duration, half-sine shock pulse in accordance with IEC 60068-2-27, continuous shock)
Vibration (operation)	5g (10 ... 150 Hz / 10 cycles / axis / X, Y, Z)

Approvals

UL approval

Identification	UL/C-UL Listed UL 508
	UL 121201 Class I, Division 2, Groups A, B, C, D, T4A

Corrosive gas test

Identification	ISA S71.04.2013 G3 Harsh Group A

Standards and regulations

Standards/specifications	EN 61000-6-2
Note	EMC – Immunity for industrial areas
Standards/specifications	EN 61000-6-3
Note	EMC – Emission for residential, business and commercial properties and small operations
Standards/specifications	EN 60068-2-78
Note	Environmental influences – Moisture and heat, constant
Standards/specifications	EN 50178
Note	Equipping power installations with electronic equipment
Standards/specifications	EN 60068-2-6
Note	Environmental influences – Vibrations (sinusoidal)
Standards/specifications	EN 60068-2-27
Note	Environmental influences – Shocks

Mounting

Mounting type	pluggable onto CAPAROC CR… current rail

Drawings

Application drawing

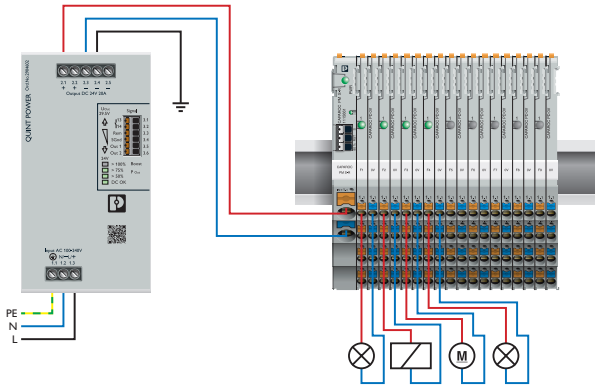

Diagram

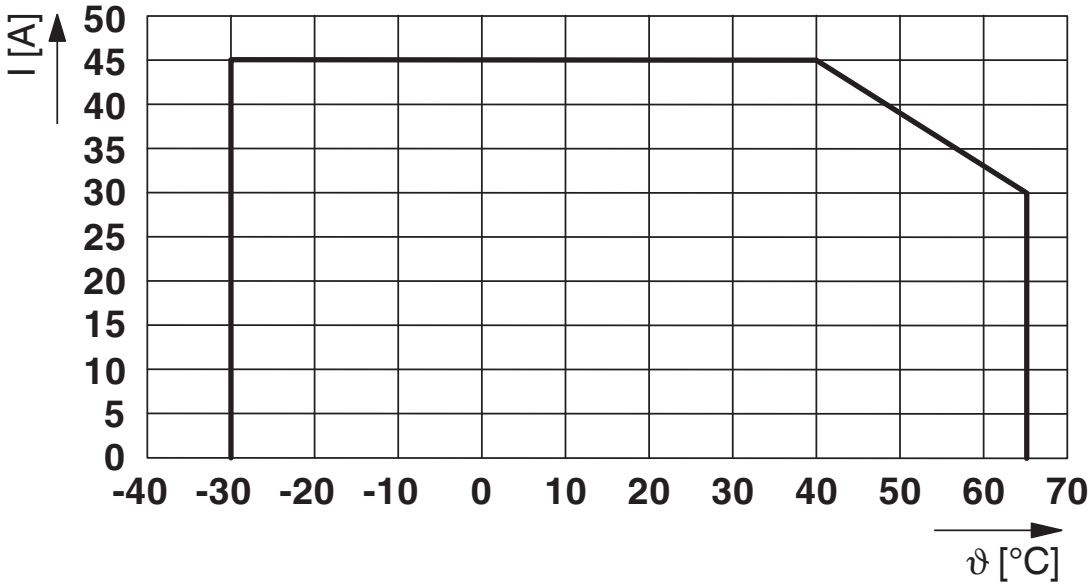

Max. permissible current in relation to the ambient temperature

Block diagram

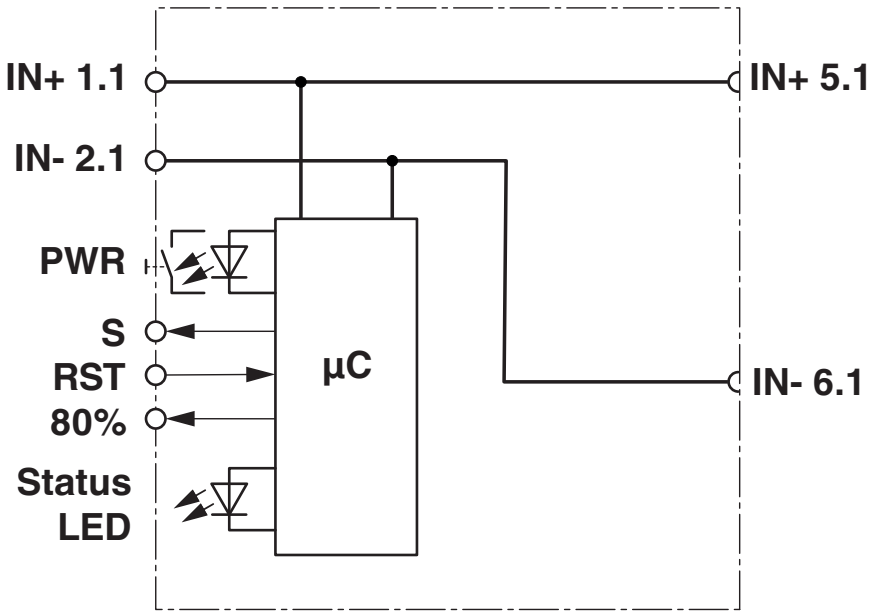

Dimensional drawing

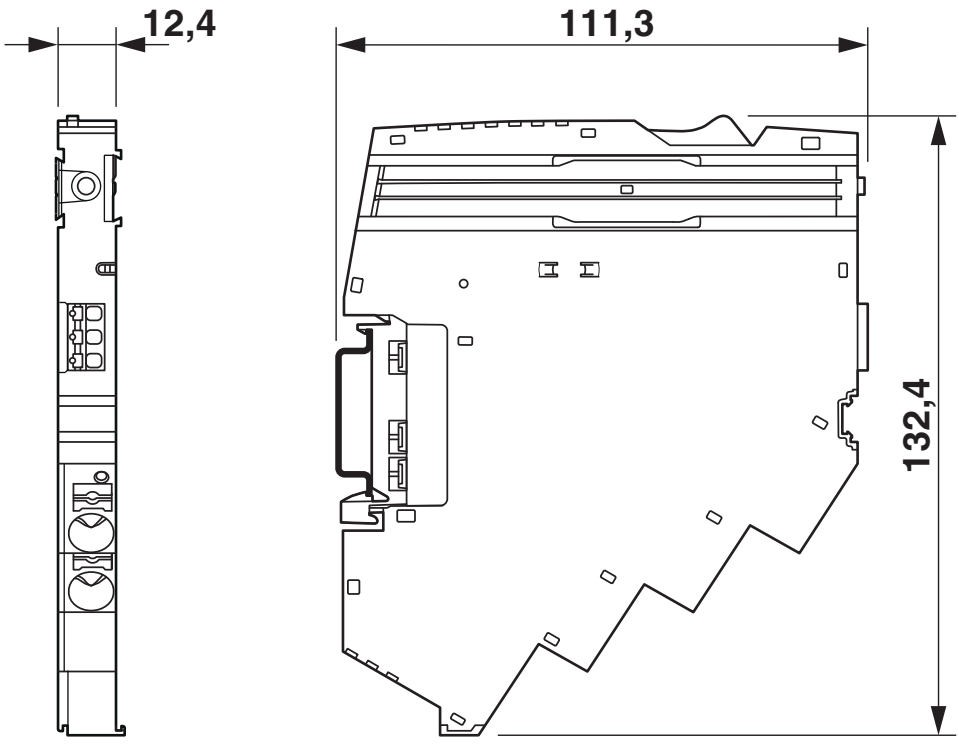

Application drawing

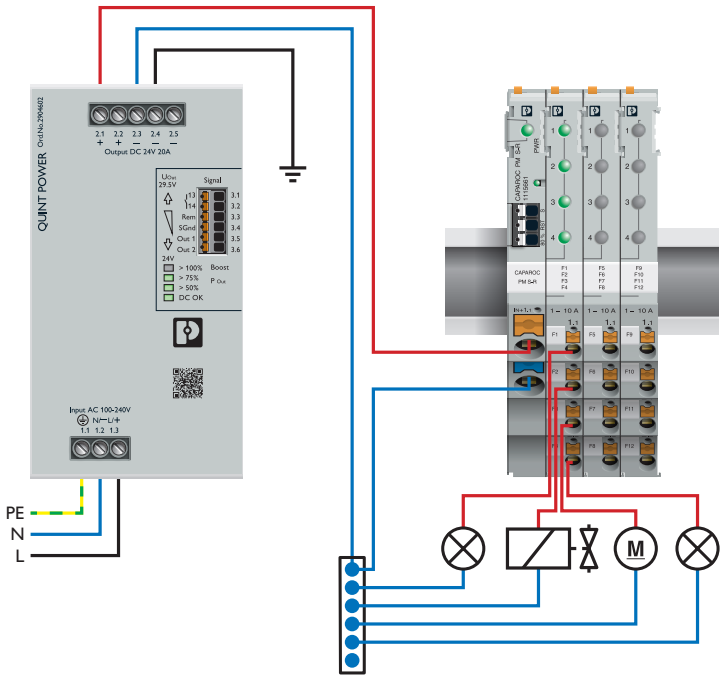

Schematic diagram

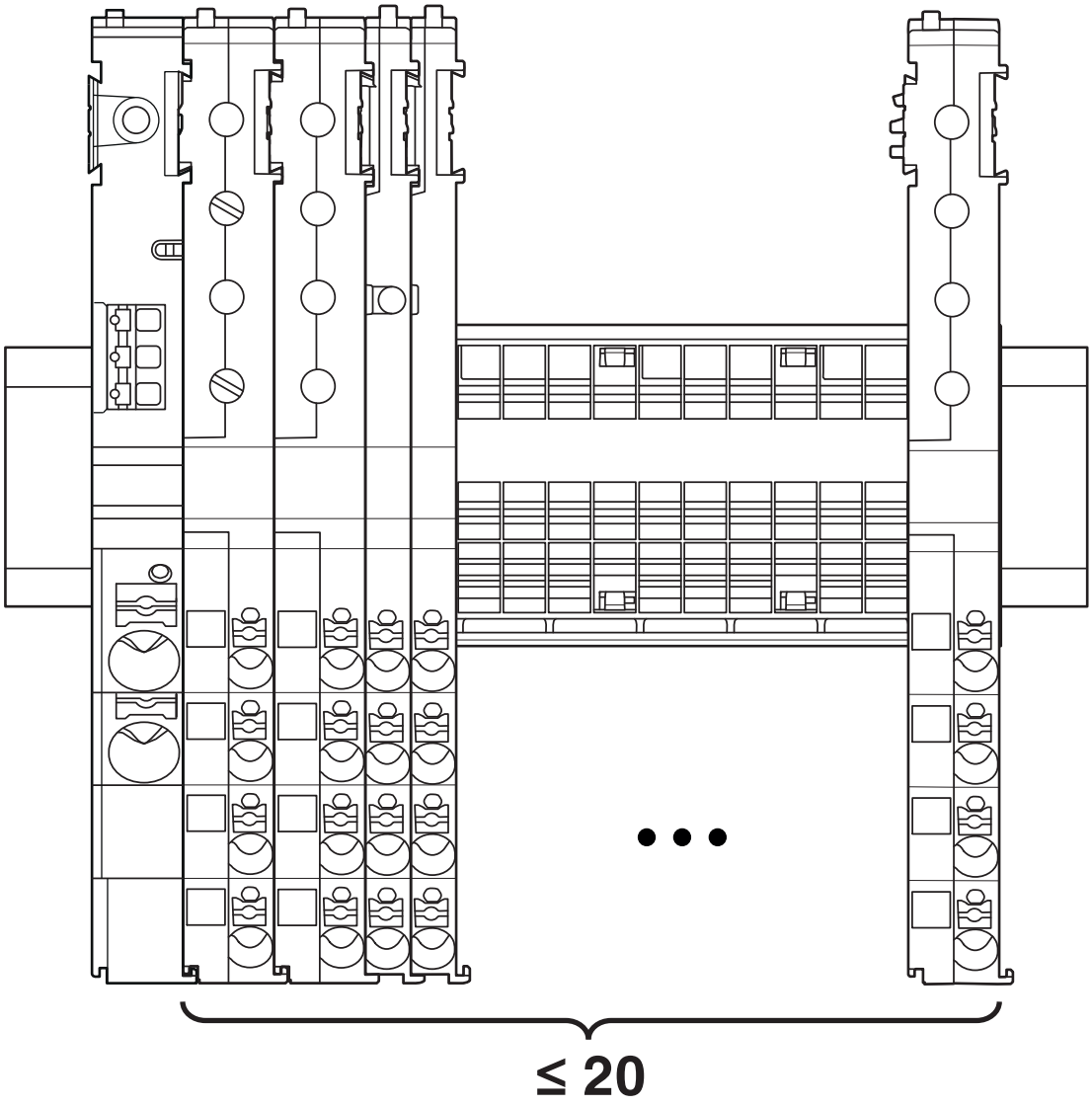

When using the power module with status output and reset input (CAPAROC PM S-R), max. 20 circuit breaker modules can be set. Any number of extra potential distribution modules can be added.

Product drawing



Approvals

To download certificates, visit the product detail page: https://www.phoenixcontact.com/us/products/1115661

UL Listed
Approval ID: FILE E 123528

cUL Listed
Approval ID: FILE E 123528

cUL Listed
Approval ID: FILE E 483407

UL Listed
Approval ID: FILE E 483407

cULus Listed

cULus Listed

Classifications

ECLASS

ECLASS-11.0	27140401
ECLASS-12.0	27140401
ECLASS-13.0	27140401

ETIM

ETIM 9.0	EC003538

UNSPSC

UNSPSC 21.0	39121400

Environmental product compliance

EU RoHS

Fulfills EU RoHS substance requirements	Yes
Exemption	7(a), 7(c)-I

China RoHS

Environment friendly use period (EFUP)	EFUP-50
	An article-related China RoHS declaration table can be found in the download area for the respective article under "Manufacturer declaration". For all articles with EFUP-E, no China RoHS declaration table issued and required.

EU REACH SVHC

REACH candidate substance (CAS No.)	Lead(CAS: 7439-92-1)
SCIP	6cd7ff5b-907b-4f8c-88cb-b2e6402053a9

Mandatory accessories

CAPAROC CR 20 - Busbar

1110989

https://www.phoenixcontact.com/us/products/1110989

Busbar for CAPAROC system with 20 slots. For installation on a DIN rail.



CAPAROC CR 8 - Busbar

1115672

https://www.phoenixcontact.com/us/products/1115672

Busbar for the CAPAROC system with 8 slots. For installation on a DIN rail.



Accessories

CAPAROC E1 12-24DC/1-4A - Electronic circuit breaker

1115415

https://www.phoenixcontact.com/us/products/1115415



1-channel electronic circuit breaker module for protecting 12 and 24 V DC loads against overload and short circuit. Nominal current adjustable from 1 A to 4 A via LED button. For DIN rail installation via the CAPAROC current rails.

CAPAROC E1 12-24DC/1-10A - Electronic circuit breaker

1115649

https://www.phoenixcontact.com/us/products/1115649



1-channel electronic circuit breaker module for protecting 12 and 24 V DC loads against overload and short circuit. Nominal current adjustable from 1 A to 10 A via LED button. For DIN rail installation via the CAPAROC current rails.

CAPAROC E1 12-24DC/1A - Electronic circuit breaker

1157288

https://www.phoenixcontact.com/us/products/1157288



1-channel electronic circuit breaker module for protecting 12 and 24 V DC loads against overload and short circuit. With fixed nominal current. For DIN rail installation via the CAPAROC current rails.

CAPAROC E1 12-24DC/2A - Electronic circuit breaker

1157290

https://www.phoenixcontact.com/us/products/1157290



1-channel electronic circuit breaker module for protecting 12 and 24 V DC loads against overload and short circuit. With fixed nominal current. For DIN rail installation via the CAPAROC current rails.

CAPAROC E1 12-24DC/4A - Electronic circuit breaker

1157285

https://www.phoenixcontact.com/us/products/1157285



1-channel electronic circuit breaker module for protecting 12 and 24 V DC loads against overload and short circuit. With fixed nominal current. For DIN rail installation via the CAPAROC current rails.

CAPAROC E1 12-24DC/6A - Electronic circuit breaker

1157286

https://www.phoenixcontact.com/us/products/1157286



1-channel electronic circuit breaker module for protecting 12 and 24 V DC loads against overload and short circuit. With fixed nominal current. For DIN rail installation via the CAPAROC current rails.

CAPAROC E1 12-24DC/8A - Electronic circuit breaker

1157279

https://www.phoenixcontact.com/us/products/1157279



1-channel electronic circuit breaker module for protecting 12 and 24 V DC loads against overload and short circuit. With fixed nominal current. For DIN rail installation via the CAPAROC current rails.

CAPAROC E1 12-24DC/10A - Electronic circuit breaker

1157284

https://www.phoenixcontact.com/us/products/1157284



1-channel electronic circuit breaker module for protecting 12 and 24 V DC loads against overload and short circuit. With fixed nominal current. For DIN rail installation via the CAPAROC current rails.

CAPAROC E2 12-24DC/1-4A - Electronic circuit breaker

1115655

https://www.phoenixcontact.com/us/products/1115655



2-channel electronic circuit breaker module for protecting 12 and 24 V DC loads against overload and short circuit. Nominal current adjustable from 1 A to 4 A via step switch. For DIN rail installation via the CAPAROC current rails.

CAPAROC E2 12-24DC/2-10A - Electronic circuit breaker

1110984

https://www.phoenixcontact.com/us/products/1110984



2-channel electronic circuit breaker module for protecting 12 and 24 V DC loads against overload and short circuit. Nominal current adjustable from 2 A to 10 A via step switch. For DIN rail installation via the CAPAROC current rails.

CAPAROC E4 12-24DC/1-4A - Electronic circuit breaker

1115657

https://www.phoenixcontact.com/us/products/1115657



Four-channel electronic circuit breaker module for protecting 12 and 24 V DC loads against overload and short circuit. Nominal current adjustable from 1 A to 4 A via LED button. For DIN rail installation via the CAPAROC current rails.

CAPAROC E4 12-24DC/1-10A - Electronic circuit breaker

1115658

https://www.phoenixcontact.com/us/products/1115658



Four-channel electronic circuit breaker module for protecting 12 and 24 V DC loads against overload and short circuit. Nominal current adjustable from 1 A to 10 A via LED button. For DIN rail installation via the CAPAROC current rails.

CAPAROC PD 0V - Potential distributors

1110987

https://www.phoenixcontact.com/us/products/1110987



Potential distributor with Push-in connections for directly connecting the 0 V return conductor in the CAPAROC system. For DIN rail installation via the CAPAROC current rails.

UC-TM 12 - Marker for terminal blocks

0819194

https://www.phoenixcontact.com/us/products/0819194



Marker for terminal blocks, Sheet, white, unlabeled, can be labeled with: BLUEMARK ID COLOR, BLUEMARK ID, BLUEMARK CLED, PLOTMARK, CMS-P1-PLOTTER, mounting type: snapped, for terminal block width: 12 mm, lettering field size: 11.45 x 10.5 mm, Number of individual labels: 40

UCT-TM 12 - Marker for terminal blocks

0829144

https://www.phoenixcontact.com/us/products/0829144



Marker for terminal blocks, Sheet, white, unlabeled, can be labeled with: TOPMARK NEO, TOPMARK LASER, BLUEMARK ID COLOR, BLUEMARK ID, BLUEMARK CLED, THERMOMARK PRIME, THERMOMARK CARD 2.0, THERMOMARK CARD, mounting type: snapped, for terminal block width: 12 mm, lettering field size: 10.8 x 9.6 mm, Number of individual labels: 30

CAPAROC CR EXT20 - Busbar

1115674

https://www.phoenixcontact.com/us/products/1115674



Extension busbar with 20 slots for the CAPAROC system. For installation on a DIN rail.

CAPAROC CR EXT8 - Busbar

1110990

https://www.phoenixcontact.com/us/products/1110990



Extension busbar with 8 slots for CAPAROC system. For installation on a DIN rail.

CAPAROC CR EXT4 - Busbar

1110991

https://www.phoenixcontact.com/us/products/1110991



Extension busbar with 4 slots for the CAPAROC system. For installation on a DIN rail.

CAPAROC CR CON - Metal part

1270955

https://www.phoenixcontact.com/us/products/1270955



Metal extension rails from connecting CAPAROC initial busbars.

Phoenix Contact 2024 © - all rights reserved
https://www.phoenixcontact.com

Phoenix Contact USA
586 Fulling Mill Road
Middletown, PA 17057, United States
(+717) 944-1300
info@phoenixcon.com