DC centrifugal compact fan

single-intake



ebm-papst St. Georgen GmbH & Co. KG
Hermann-Papst-Str. 1
D-78112 St. Georgen
Phone +49 (0) 7724 81-0
Fax +49 (0) 7724 81-1309
info2@de.ebmpapst.com
www.ebmpapst.com

Nominal data

Type	RLF 100-11/12	
Nominal voltage	VDC	12
Nominal voltage range	VDC	8 .. 15
Speed (rpm)	min^{-1}	5100
Power consumption	W	8.0
Min. ambient temperature	°C	-20
Max. ambient temperature	°C	75
Air flow	m^3/h	64
Sound power level	B	6.4

ml = Max. load · me = Max. efficiency · fa = Free air · cs = Customer specification · ce = Customer equipment
Subject to change

DC centrifugal compact fan

single-intake

Technical description

General description	Optional cap for outlet opening Backward-curved impeller
Weight	0.320 kg
Dimensions	127 x 127 x 25 mm
Impeller material	Glass-fiber reinforced plastic
Housing material	Scroll housing made of glass-fiber reinforced plastic, housing base made of galvanized sheet steel.
Airflow direction	Axial intake, radial discharge from outlet.
Direction of rotation	Clockwise, viewed toward rotor
Storage	Ball bearing
Service life L10 at 40 °C	80000 h
Service life L10 at maximum temperature	30000 h
Cable	With leads AWG 22, TR 64
Motor protection	Protection against reverse polarity and blocked rotor.
Locked-rotor protection	Electronic locked-rotor and overload protection
Approval	VDE, CSA, UL, CE
Option	Speed signal

ebm-papst St. Georgen GmbH & Co. KG · Hermann-Papst-Str. 1 · D-78112 St. Georgen · Phone +49 (0) 7724 81-0 · Fax +49 (0) 7724 81-1309 · info2@de.ebmpapst.com · www.ebmpapst.com

DC centrifugal compact fan

single-intake

Product drawing

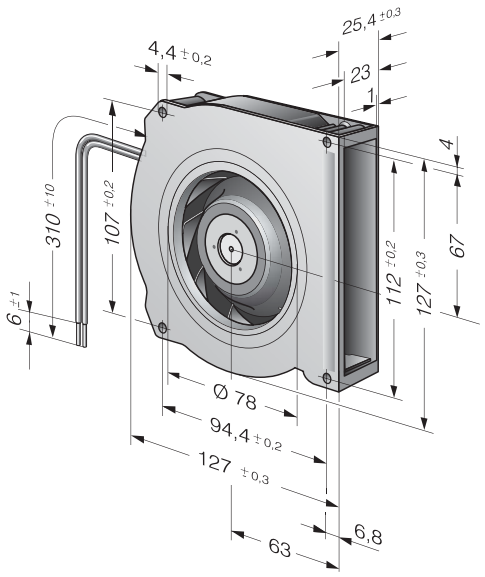

ebm-papst St. Georgen GmbH & Co. KG · Hermann-Papst-Str. 1 · D-78112 St. Georgen · Phone +49 (0) 7724 81-0 · Fax +49 (0) 7724 81-1309 · info2@de.ebmpapst.com · www.ebmpapst.com

DC centrifugal compact fan

single-intake

Curves: Air performance

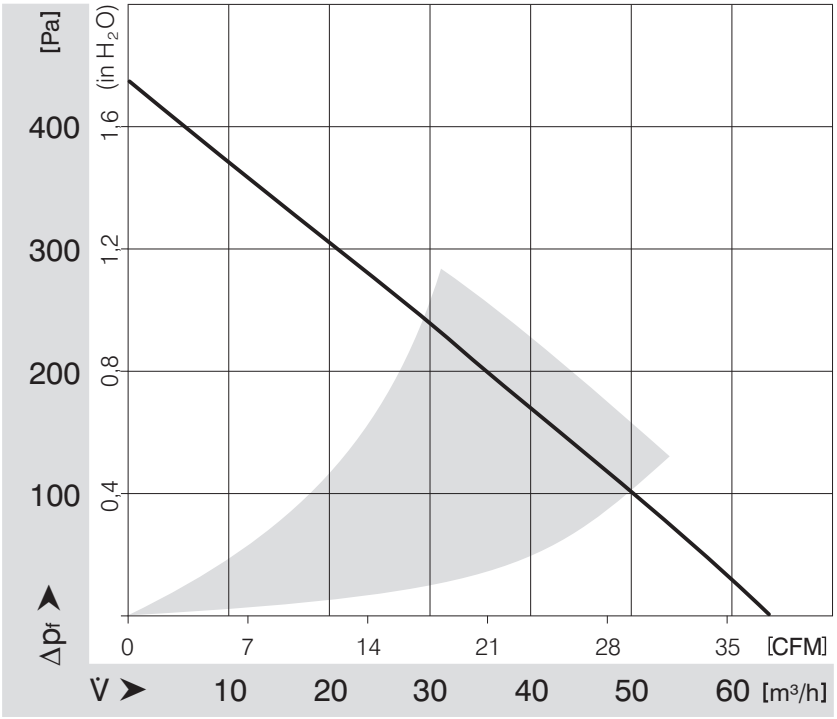

ebm-papst St. Georgen GmbH & Co. KG · Hermann-Papst-Str. 1 · D-78112 St. Georgen · Phone +49 (0) 7724 81-0 · Fax +49 (0) 7724 81-1309 · info2@de.ebmpapst.com · www.ebmpapst.com