SIEMENS

Data sheet 3RV2032-4JA10



Circuit breaker size S2 for motor protection, CLASS 10 A-release 54...65 A N-release 845 A screw terminal increased switching capacity

product brand name	SIRIUS
product designation	Circuit breaker
design of the product	For motor protection
product type designation	3RV2
General technical data	
size of the circuit-breaker	S2
size of contactor can be combined company-specific	S2
product extension auxiliary switch	Yes
power loss [W] for rated value of the current	
● at AC in hot operating state	26 W
● at AC in hot operating state per pole	8.7 W
insulation voltage with degree of pollution 3 at AC rated value	690 V
surge voltage resistance rated value	6 kV
shock resistance according to IEC 60068-2-27	25g / 11 ms Sinus
mechanical service life (operating cycles)	
● of the main contacts typical	20 000
● of auxiliary contacts typical	20 000
electrical endurance (operating cycles) typical	20 000
type of protection according to ATEX directive 2014/34/EU	Ex II (2) GD
certificate of suitability according to ATEX directive 2014/34/EU	DMT 02 ATEX F 001
reference code according to IEC 81346-2	Q
Substance Prohibitance (Date)	03/01/2017
Ambient conditions	
installation altitude at height above sea level maximum	2 000 m
ambient temperature	
● during operation	-20 ... +60 °C
● during storage	-50 ... +80 °C
● during transport	-50 ... +80 °C
relative humidity during operation	10 ... 95 %
Main circuit	
number of poles for main current circuit	3
adjustable current response value current of the current-dependent overload release	54 ... 65 A
operating voltage	
● rated value	20 ... 690 V
● at AC-3 rated value maximum	690 V
● at AC-3e rated value maximum	690 V
operating frequency rated value	50 ... 60 Hz
operational current rated value	65 A
operational current	

Subject to change without notice
© Copyright Siemens

● at AC-3 at 400 V rated value	65 A
● at AC-3e at 400 V rated value	65 A
operating power	
● at AC-3	
— at 230 V rated value	18.5 kW
— at 400 V rated value	30 kW
— at 500 V rated value	45 kW
— at 690 V rated value	55 kW
● at AC-3e	
— at 230 V rated value	18.5 kW
— at 400 V rated value	30 kW
— at 500 V rated value	45 kW
— at 690 V rated value	55 kW
operating frequency	
● at AC-3 maximum	15 1/h
● at AC-3e maximum	15 1/h
Protective and monitoring functions	
product function	
● ground fault detection	No
● phase failure detection	Yes
trip class	CLASS 10
design of the overload release	thermal
maximum short-circuit current breaking capacity (Icu)	
● at AC at 240 V rated value	100 kA
● at AC at 400 V rated value	100 kA
● at AC at 500 V rated value	10 kA
● at AC at 690 V rated value	6 kA
operating short-circuit current breaking capacity (Ics) at AC	
● at 240 V rated value	100 kA
● at 400 V rated value	50 kA
● at 500 V rated value	8 kA
● at 690 V rated value	4 kA
response value current of instantaneous short-circuit trip unit	845 A
UL/CSA ratings	
full-load current (FLA) for 3-phase AC motor	
● at 480 V rated value	65 A
● at 600 V rated value	62 A
yielded mechanical performance [hp]	
● for 3-phase AC motor	
— at 200/208 V rated value	20 hp
— at 220/230 V rated value	25 hp
— at 460/480 V rated value	50 hp
— at 575/600 V rated value	60 hp
Short-circuit protection	
product function short circuit protection	Yes
design of the short-circuit trip	magnetic
design of the fuse link for IT network for short-circuit protection of the main circuit	
● at 240 V	none required
● at 400 V	160
● at 500 V	125
● at 690 V	100
Installation/ mounting/ dimensions	
mounting position	any
fastening method	screw and snap-on mounting onto 35 mm DIN rail according to DIN EN 60715
height	140 mm
width	55 mm
depth	149 mm
required spacing	
● with side-by-side mounting at the side	0 mm
● for grounded parts at 400 V	

© Copyright Siemens

— downwards	50 mm
— upwards	50 mm
— at the side	10 mm
● for live parts at 400 V	
— downwards	50 mm
— upwards	50 mm
— at the side	10 mm
● for grounded parts at 500 V	
— downwards	50 mm
— upwards	50 mm
— at the side	10 mm
● for live parts at 500 V	
— downwards	50 mm
— upwards	50 mm
— at the side	10 mm
● for grounded parts at 690 V	
— downwards	50 mm
— upwards	50 mm
— at the side	10 mm
● for live parts at 690 V	
— downwards	50 mm
— upwards	50 mm
— at the side	10 mm
Connections/ Terminals	
type of electrical connection	
● for main current circuit	screw-type terminals
arrangement of electrical connectors for main current circuit	Top and bottom
type of connectable conductor cross-sections	
● for main contacts	
— solid or stranded	2x (1 ... 35 mm²), 1x (1 ... 50 mm²)
— finely stranded with core end processing	2x (1 ... 25 mm²), 1x (1 ... 35 mm²)
● for AWG cables for main contacts	2x (18 ... 2), 1x (18 ... 1)
tightening torque	
● for main contacts with screw-type terminals	3 ... 4.5 N·m
design of screwdriver shaft	Diameter 5 to 6 mm
size of the screwdriver tip	Pozidriv size 2
design of the thread of the connection screw	
● for main contacts	M6
Safety related data	
B10 value	
● with high demand rate according to SN 31920	5 000
proportion of dangerous failures	
● with low demand rate according to SN 31920	50 %
● with high demand rate according to SN 31920	50 %
failure rate [FIT]	
● with low demand rate according to SN 31920	50 FIT
T1 value for proof test interval or service life according to IEC 61508	10 a
protection class IP on the front according to IEC 60529	IP20
touch protection on the front according to IEC 60529	finger-safe, for vertical contact from the front
display version for switching status	Handle
Certificates/ approvals	

General Product Approval				**For use in hazard-ous locations**
Confirmation			KC	

Subject to change without notice
© Copyright Siemens

For use in hazard-ous locations	Declaration of Conformity	Test Certificates		Marine / Shipping
ATEX	EG-Konf.	Type Test Certific-ates/Test Report	Special Test Certific-ate	ABS

Marine / Shipping					other
BUREAU VERITAS	DNV	LRS	PRS	RINA	Confirmation

other	Railway	
VDE	Vibration and Shock	Confirmation

Further information

Siemens has decided to exit the Russian market (see here).
https://press.siemens.com/global/en/pressrelease/siemens-wind-down-russian-business
Siemens is working on the renewal of the current EAC certificates.
Please contact your local Siemens office on the status of validity of the EAC certification if you intend to import or offer to supply these products to an EAC relevant market (other than the sanctioned EAEU member states Russia or Belarus).
Information on the packaging
https://support.industry.siemens.com/cs/ww/en/view/109813875
Information- and Downloadcenter (Catalogs, Brochures,…)
https://www.siemens.com/ic10
Industry Mall (Online ordering system)
https://mall.industry.siemens.com/mall/en/en/Catalog/product?mlfb=3RV2032-4JA10
Cax online generator
http://support.automation.siemens.com/WW/CAXorder/default.aspx?lang=en&mlfb=3RV2032-4JA10
Service&Support (Manuals, Certificates, Characteristics, FAQs,...)
https://support.industry.siemens.com/cs/ww/en/ps/3RV2032-4JA10
Image database (product images, 2D dimension drawings, 3D models, device circuit diagrams, EPLAN macros, ...)
http://www.automation.siemens.com/bilddb/cax_de.aspx?mlfb=3RV2032-4JA10&lang=en
Characteristic: Tripping characteristics, I^2t, Let-through current
https://support.industry.siemens.com/cs/ww/en/ps/3RV2032-4JA10/char
Further characteristics (e.g. electrical endurance, switching frequency)
http://www.automation.siemens.com/bilddb/index.aspx?view=Search&mlfb=3RV2032-4JA10&objecttype=14&gridview=view1

Subject to change without notice
© Copyright Siemens

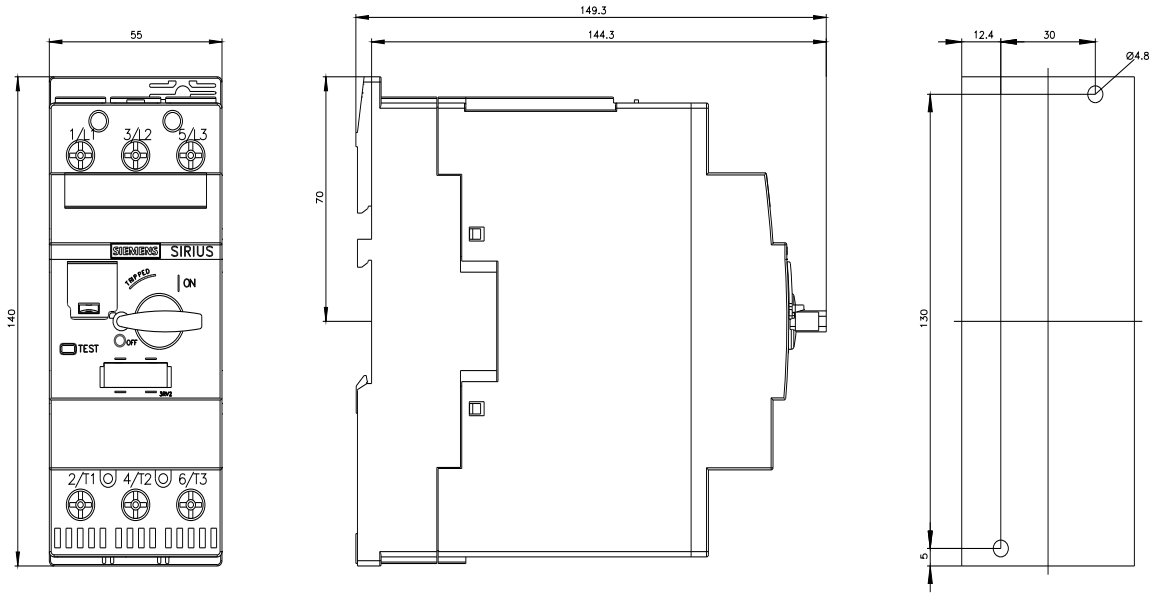

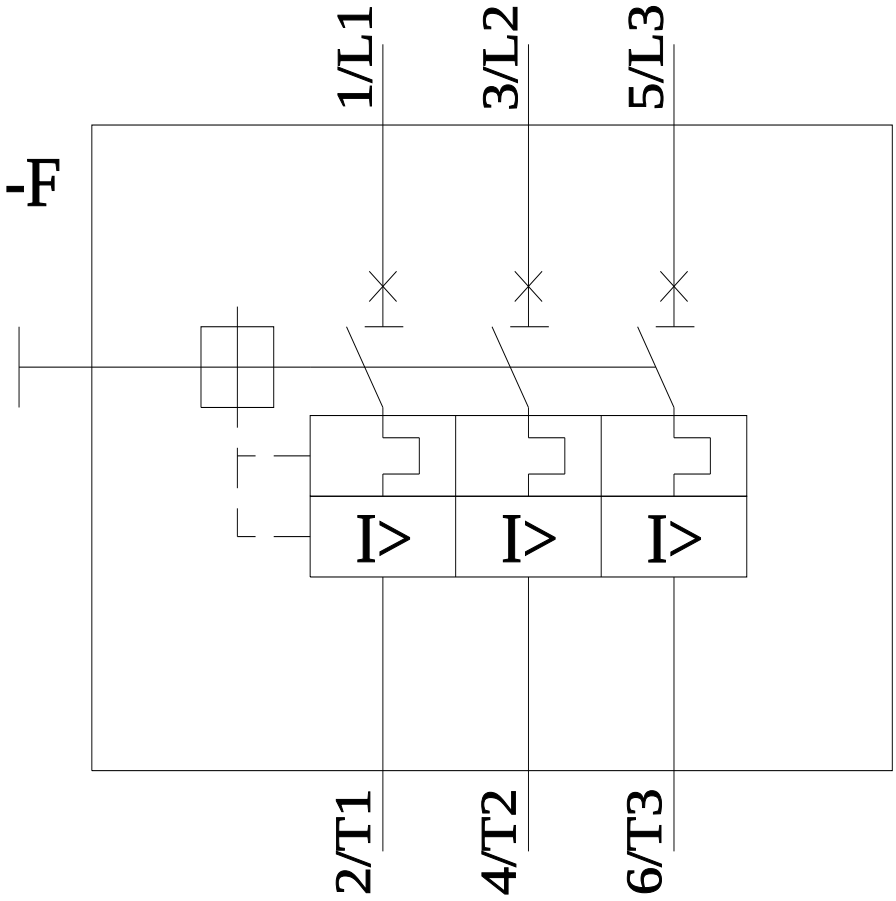

last modified: 11/21/2022

Subject to change without notice
© Copyright Siemens

Subject to change without notice
© Copyright Siemens