Data sheet



EKS36-0KF0B0S01

EKS/EKM36

MOTOR FEEDBACK SYSTEMS

SICK
Sensor Intelligence.



Illustration may differ

Ordering information

Type	part no.
EKS36-0KF0B0S01	1084892

Other models and accessories ➜ www.sick.com/EKS_EKM36

Detailed technical data

Features

Special device	✓
Specialty	Customized stator coupling
Standard reference device	EKS36-0KF0B018A, 1084229
Items supplied	M3 mounting screws for stator coupling not included with delivery.

Safety-related parameters

$MTTF_D$ (mean time to dangerous failure)	155 years (EN ISO 13849) [1]

[1] This product is a standard product and does not constitute a safety component as defined in the Machinery Directive. Calculation based on nominal load of components, average ambient temperature 60 °C, frequency of use 8760 h/a. All electronic failures are considered hazardous. For more information, see document no. 8015532.

Performance

Position	
Resolution per revolution	18 bit
System accuracy	± 120 ″
Signal noise (σ)	± 4 ″ (See “signal noise” and “attenuation” diagrams)
Number of the absolute ascertainable revolutions	1
Available memory area	8,192 Byte
Measurement step per revolution	262,144
Measurement principle	Optical

Interfaces

Type of code for the absolute value	Binary
Code sequence	Increasing, when turning the shaft For clockwise rotation, looking in direction “A” (see dimensional drawing)
Communication interface	HIPERFACE DSL®
Initialization time	Max. 500 ms [1]

[1] From reaching a permitted operating voltage.

Measurement external temperature resistance	32 bit value, without prefix (1 Ω) 0 ... 209.600 Ω At –40 °C ... +160 °C: NTC +-2K; PTC+-3K

[1] From reaching a permitted operating voltage.

Electronics

Connection type	Male connector, 4-pin
Supply voltage	7 V ... 12 V
Warm-up time voltage ramp	Max. 180 ms [1]
Recommended supply voltage	8 V
Current consumption	≤ 150 mA (See current consumption diagram) [2]
Output frequency for the digital positionvalue	0 kHz ... 75 kHz

[1] Duration of voltage ramp between 0 and 7.0 V.

[2] Current rating applies when using interface circuit suggestions as shown in HIPERFACE DSL ® manual (8017595).

Mechanics

Shaft version	Tapered shaft
Flange type / stator coupling	Stator coupling
Dimensions	See dimensional drawing
Weight	0.1 kg
Moment of inertia of the rotor	4.5 gcm²
Operating speed	≤ 12,000 min⁻¹
Angular acceleration	≤ 500,000 rad/s²
Operating torque	0.2 Ncm
Start up torque	0.3 Ncm
Permissible movement static	± 0.1 mm, - 0.4 mm, - 0.2 mm radial, axial, axial
Permissible movement dynamic	± 0.05 mm radial ± 0.1 mm axial
Life of ball bearings	3.6 x 10^9 revolutions

Ambient data

Operating temperature range	–20 °C ... +115 °C [1]
Storage temperature range	–40 °C ... +125 °C [2]
Relative humidity/condensation	90 %, Condensation not permitted
Resistance to shocks	100 g, 6 ms (according to EN 60068-2-27)
Frequency range of resistance to vibrations	50 g, 10 Hz ... 2,000 Hz (EN 60068-2-6)
EMC	According to EN 61000-6-2, EN 61000-6-4 and IEC 61326-3 [3]
Enclosure rating	IP40, with mating plugs inserted and cover closed (IEC 60529-1)

[1] Given typical thermal connection between motor flange and encoder stator coupling. The max. internal sensor temperature may not exceed 125 °C.

[2] Without package.

[3] The EMC according to the standards quoted is achieved when the motor feedback system is mounted in an electrically conductive housing, which is connected to the central earthing point of the motor controller via a cable screen. The GND-(0 V) connection of the supply voltage is also grounded here. If other shielding concepts are used, users must perform their own tests.

Certificates

EU declaration of conformity	✓

UK declaration of conformity	✓
ACMA declaration of conformity	✓
Moroccan declaration of conformity	✓
China-RoHS	✓
Information according to Art. 3 of Data Act (Regulation EU 2023/2854)	✓

Classifications

ECLASS 5.0	27270590
ECLASS 5.1.4	27270590
ECLASS 6.0	27270590
ECLASS 6.2	27270590
ECLASS 7.0	27270590
ECLASS 8.0	27270590
ECLASS 8.1	27270590
ECLASS 9.0	27270590
ECLASS 10.0	27273805
ECLASS 11.0	27273901
ECLASS 12.0	27273901
ETIM 5.0	EC001486
ETIM 6.0	EC001486
ETIM 7.0	EC001486
ETIM 8.0	EC001486
UNSPSC 16.0901	41112113

Dimensional drawing

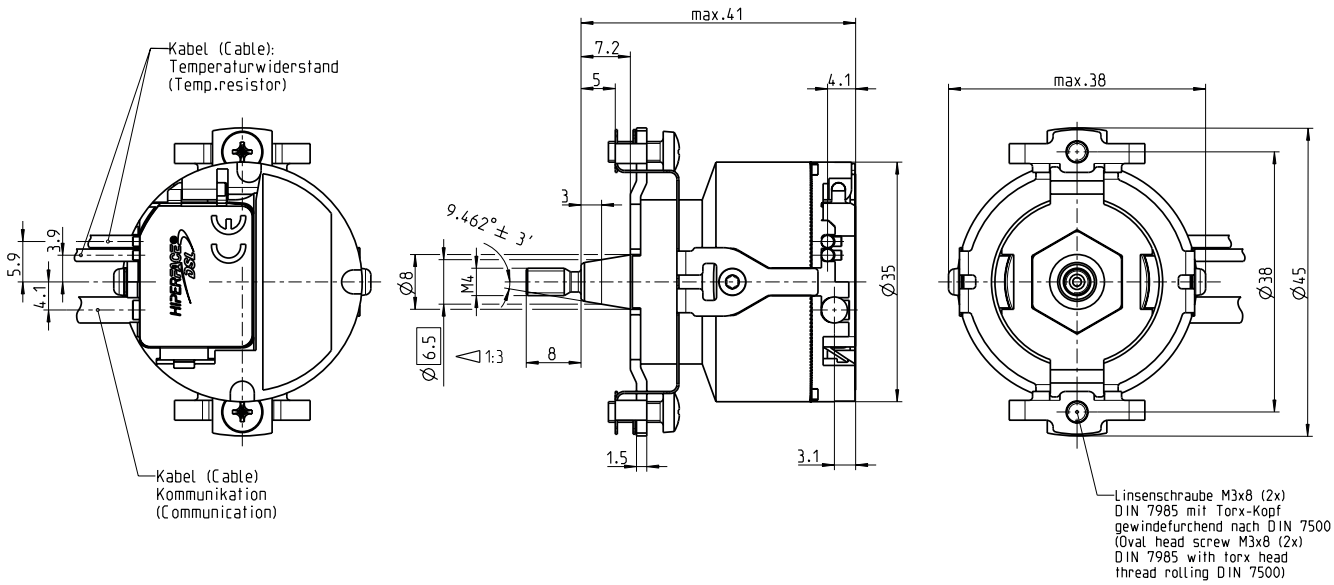

Dimensions in mm (inch)

Attachment specifications

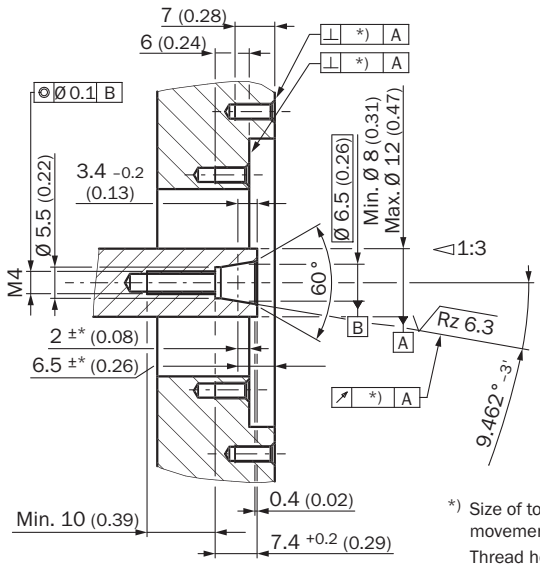

*) Size of tolerance reduce the allowed movement of the shaft, see data sheet.
Thread holes according DIN 13 with counterbore according DIN 76 min. 1.05 x diameter of thread.

① Nominal position
② The size of the tolerance reduces the permissible wave movement, see data sheet
③ Threaded holes in accordance with DIN 13 with recesses in accordance with DIN 76 min. 1.05 x thread diameter

PIN assignment Temperature sensor pin assignment

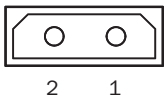

PIN	Signal	Explanation
1	T+	Thermistor connection
2	T-	Thermistor connection (to ground)
Recommended outer diameter of set of stranded wires: 2.2 mm ± 0.1 mm		
Recommended mating connector: Harwin M80-8990205		

Diagrams

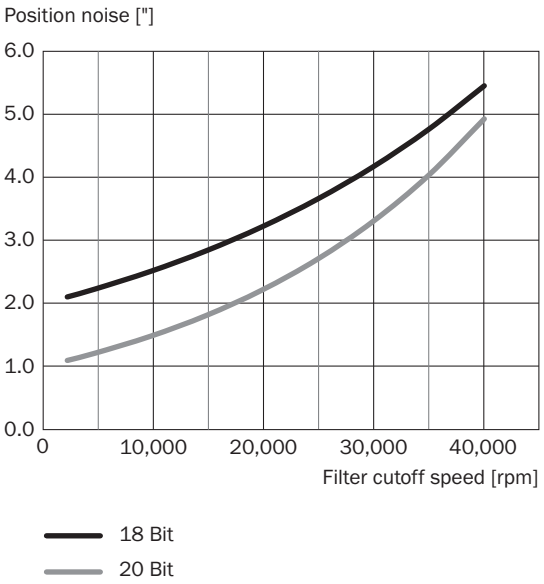

Signal noise is measured as 1 standard deviation (σ) of the value distribution. Position filter cutoff speed is set by ressource 10Ah, see page 11.

Diagrams

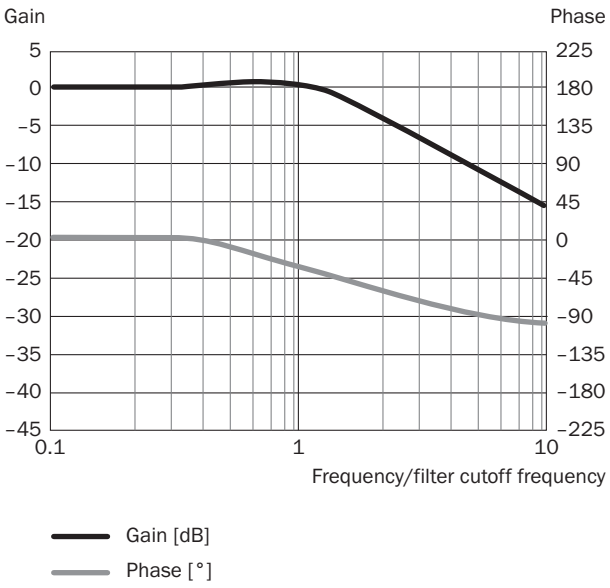

Diagrams

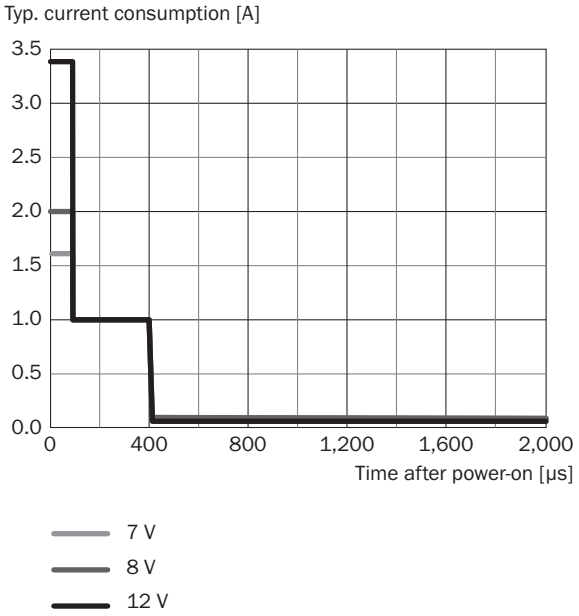
Typ. current consumption [A]
3.5
3.0
2.5
2.0
1.5
1.0
0.5
0.0
0
400
800
1,200
1,600
2,000
Time after power-on [µs]
7 V
8 V
12 V

Adjustments Supported resources for HIPERFACE DSL®

RID	Name	time overrun [ms]	Description
0x000	ROOT	75	Top node of ressource tree (all nodes reachable from here)
0x001	IDENT	75	Node with pointers to all identification ressources
0x002	MONITOR	75	Node with pointers to all monitoring ressources
0x003	ADMIN	75	Node with pointers to all administration ressources
0x004	COUNTER	75	Node with pointers to all counter ressources
0x005	DATA	75	Node with pointers to all user file ressources
0x006	SENSHUB	75	Node with pointers to all SensorHub ressources
0x080	ENCTYPE	255	Base functionality of encoder
0x081	RESOLUTN	255	Number of steps per turn
0x082	RANGE	255	Number of encoded revolutions
0x083	TYPECODE	255	Type name of encoder
0x084	SERIALNO	255	Serial no of encoder
0x085	FWREVNO	70	Firmware and hardware revision of encoder
0x086	FWDATE	70	Firmware date of encoder
0x087	EESIZE	255	Total amount of memory for user files
0x089	VPOS2RES	255	Number of steps per turn (DSL Safe Position 2)
0x0c0	TEMPRNG	255	Min and max allowed ambient temperature of encoder
0x0c1	TEMPRTUR	70	Actual ambient temperature of encoder
0x0c2	LEDRANGE	255	Min and max allowed LED current of encoder
0x0c3	LEDCURR	70	Actual LED current of encoder
0x0c4	SUPRANGE	255	Min and max allowed supply voltage of encoder
0x0c5	SUPVOLT	70	Actual supply voltage of encoder
0x0c6	SPEEDRNG	255	Max allowed shaft speed of encoder
0x0c7	SPEED	70	Actual shaft speed of encoder
0x0c8	ACCRANGE	255	Max allowed shaft acceleration of encoder
0x0cb	LIFETIME	70	Operating time and total shaft turns of encoder. For safety variants also remaining mission time is indicated.
0x0cc	ERRORLOG	195	Stored error messages of encoder
0x0cd	HISTOGRM	70	Usage history of encoder in histogram form
0x0d5	ERRLOGFI	255	Filters the error log entries
0x100	RESET	255	Reset or shutdown of encoder
0x101	SETPOS	255	Set encoder position to arbitrary preset value. Offset of position can be read back.
0x104	SETACCES	70	Set or read back access level
0x105	CHNGEKEY	255	Change password for access level
0x107	UWARNING	255	Set or read back user-defined warning boundaries
0x108	FACRESET	255	Reset user settings of encoder to factory defaults
0x109	ENCIDENT	255	Set or read back user-defined encoder index (for multi-axis systems)
0x10a	POSFILT	255	Set or read back position filter settings
0x112	LOCKINTU	255	Possibility to lock/unlock internal access levels
0x11d	FEATURES	90	Set or read back encoder features
0x11f	BOOTLOAD	255	Bootloader access for end user (planned)
0x120	READCNT	140	Read user counter value
0x121	INCCOUNT	140	Increment user counter value
0x122	RESETCNT	140	Reset user counter value
0x130	LOADFILE	255	Load user file
0x131	RWFILE	255	Read from or write to user file
0x132	FILESTAT	70	Read status of user file
0x133	MAKEFILE	255	Create, change or delete user file
0x134	DIR	130	Read directory of accessible user files
0x136	FILEBACK	255	Set or read back status of user file backup
0x200	ACCESSIO	70	Access to simple I/Os connected directly to encoder
0x201	MANAGEIO	255	Manage simple I/Os

Operation note Overview of warnings and fault indications

Error type	Error register	Error bit	Description
Position (incremental)	00h	0	A Protocol reset was executed
	00h	1	Acceleration overflow, invalid position
	00h	2	Test running
	00h	4	Internal error in angular tracking, invalid position
	00h	5	Internal error in vector length, invalid position
	00h	6	Internal error in position counter, invalid position
	00h	7	Internal error in position synchronization, invalid position
Position (absolute)	01h	0	Error in absolute position in rotation
	01h	1	Error 1 in absolute position in several rotations
	01h	2	Error 2 in absolute position in several rotations
	01h	3	Error 3 in absolute position in several rotations
	01h	4	Position cross check error (only safety versions)
Initialization	02h	0	Switch-on self-test undertaken (only safety versions)
	02h	1	Warning safety parameter: error could not be rectified (only safety versions)
	02h	2	Warning safety parameter: error could not be rectified (only safety versions)
	02h	3	Error calibration data
	02h	4	Internal communications error 1
	02h	5	Internal communications error 2
	02h	6	Internal general error
Test	03h	0	Critical temperature
	03h	1	Critical LED current
	03h	2	Critical supply voltage
	03h	3	Critical rotation speed
	03h	4	Critical acceleration
	03h	5	Critical overflow
	03h	6	Internal monitoring error
Access to resources	04h	0	Invalid argument given during resource access procedure
	04h	1	Resource access refused due to incorrect access level
	04h	2	Internal error during resoure access
	04h	3	Error when accessing a user file
User defined Warnings	07h	0	User-defined warning 0
	07h	1	User-defined warning 1
	07h	2	User-defined warning 2
	07h	3	User-defined warning 3

Operation note Supported access levels

Access level	User	Standard access key
0	Execute (default setting)	0000 (30 30 30 30h)
1	Bediener	1111 (31 31 31 31h)
2	Wartung	2222 (32 32 32 32h)
3	Berechtigter Client	3333 (33 33 33 33h)
4	Benutzerservice	4444 (34 34 34 34h)

Recommended accessories

Other models and accessories ➜ www.sick.com/EKS_EKM36

	Brief description	Type	part no.
Mounting systems			
	• **Description:** Mounting tools • **Suitable for:** Anschlussart T,J,K	BEF-MW-EKX36	2060224
connectors and cables			
	• **Connection type head A:** Female connector, stranded wire, 2-pin, straight • **Connection type head B:** Flying leads • **Signal type:** HIPERFACE DSL® • **Cable:** 0.2 m, 2-wire • **Description:** HIPERFACE DSL®, twisted, unshielded	DOL-0B02-G0M2XC1	2062083
	• **Connection type head A:** Female connector, stranded wire, 2-pin, straight • **Connection type head B:** Flying leads • **Signal type:** HIPERFACE DSL® • **Cable:** 0.4 m, 2-wire • **Description:** HIPERFACE DSL®, twisted, unshielded	DOL-0B02-G0M4XC1	2086286
	• **Connection type head A:** Female connector, stranded wire, 4-pin, straight • **Connection type head B:** Flying leads • **Signal type:** HIPERFACE DSL® • **Cable:** 0.43 m, 2-wire • **Description:** HIPERFACE DSL®, shielded • **Note:** Non-isolated drain wire	DOL-0B03-G0M4XC1	2087314
	• **Connection type head A:** Female connector, stranded wire, 2-pin, straight • **Connection type head B:** Flying leads • **Signal type:** HIPERFACE DSL® • **Cable:** 0.3 m, 2-wire • **Description:** HIPERFACE DSL®, twisted, unshielded	DOL-0B02-G0M3XC1	2091818
	• **Connection type head A:** Female connector, stranded wire, 4-pin, straight • **Connection type head B:** Flying leads • **Signal type:** HIPERFACE DSL® • **Cable:** 0.36 m, 2-wire • **Description:** HIPERFACE DSL®, twisted, shielded	DOL-0B02-G0M3AC2	2108944

SICK AT A GLANCE

SICK is one of the leading manufacturers of intelligent sensors and sensor solutions for industrial applications. A unique range of products and services creates the perfect basis for controlling processes securely and efficiently, protecting individuals from accidents and preventing damage to the environment.

We have extensive experience in a wide range of industries and understand their processes and requirements. With intelligent sensors, we can deliver exactly what our customers need. In application centers in Europe, Asia and North America, system solutions are tested and optimized in accordance with customer specifications. All this makes us a reliable supplier and development partner.

Comprehensive services complete our offering: SICK LifeTime Services provide support throughout the machine life cycle and ensure safety and productivity.

For us, that is “Sensor Intelligence.”

WORLDWIDE PRESENCE:

Contacts and other locations –www.sick.com