Ultrasonic sensor

UC6000-30GM70S-UE2R2-V15

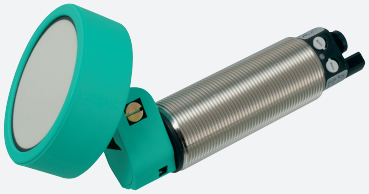

- Analog output 0 ... 10 V
- 1 switch output
- Synchronization options
- Temperature compensation
- Can be parameterized via the ULTRA-PROG-IR software and interface (accessories)

Ultrasonic diffuse sensor with pivoting transducer

Dimensions

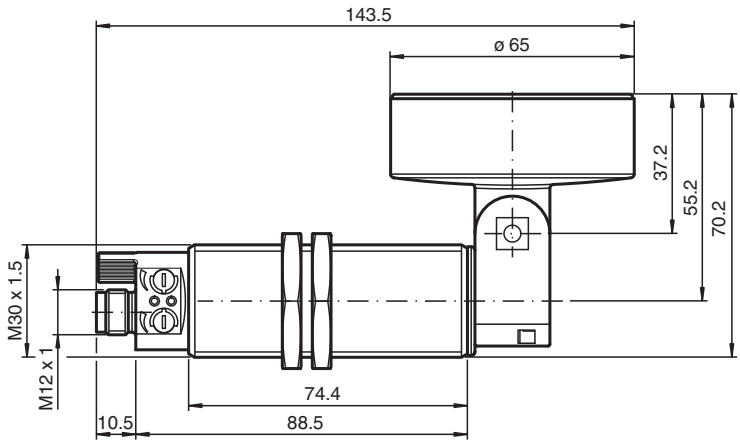

Technical Data

General specifications		
Sensing range		350 ... 6000 mm
Adjustment range		400 ... 6000 mm
Dead band		0 ... 350 mm
Standard target plate		100 mm x 100 mm
Transducer frequency		approx. 80 kHz
Response delay		≤ 275 ms
Nominal ratings		
Temperature drift		≤ ± 1.5 % of full-scale value
Time delay before availability	t_v	≤ 300 ms
Limit data		
Permissible cable length		max. 300 m
Indicators/operating means		
LED yellow		switching state switch output
LED green/yellow		yellow: object in evaluation range green: Teach-In
Potentiometer		switching output adjustable
Electrical specifications		

Release date: 2025-06-12 Date of issue: 2025-06-14 Filename: 238403_eng.pdf

Technical Data

Rated operating voltage	U_e	24 V DC
Operating voltage	U_B	20 ... 30 V DC (including ripple)
Ripple		≤ 10 %
No-load supply current	I_0	≤ 50 mA
Interface		
Interface type		Infrared
Mode		point-to-point connection
Input/Output		
Input/output type		1 synchronization connection, bidirectional (Factory setting: synchronized mode) / Teach-In input
0 Level		≤ 3 V
1 Level		≥ 15 V
Input impedance		typ. 900 Ω
Number of sensors		max. 10
Switching output		
Output type		1 switch output PNP, NO (NC contact programmable)
Default setting		400 ... 6000 mm (adjustable via potentiometer)
Repeat accuracy	R	± 9 mm
Operating current	I_L	300 mA , short-circuit/overload protected
Switching frequency		≤ 1 Hz
Switching hysteresis		60 mm (programmable)
Voltage drop		≤ 3 V
Off-state current		≤ 10 µA
Analog output		
Output type		1 voltage output 0 ... 10 V , ascending/descending programmable
Default setting		rising ramp ; evaluation limit A1: 400 mm ; evaluation limit A2: 6000 mm
Load resistor		≥ 2 kΩ
Compliance with standards and directives		
Standard conformity		
Standards		EN IEC 60947-5-2:2020 IEC 60947-5-2:2019 EN 60947-5-7:2003 IEC 60947-5-7:2003
Approvals and certificates		
UL approval		cULus Listed, Class 2 Power Source
CCC approval		CCC approval / marking not required for products rated ≤36 V
Ambient conditions		
Ambient temperature		-25 ... 70 °C (-13 ... 158 °F)
Storage temperature		-25 ... 85 °C (-13 ... 185 °F)
Shock resistance		30 g , 11 ms period
Vibration resistance		10 ... 55 Hz , Amplitude ± 1 mm
Mechanical specifications		
Connection type		Connector plug M12 x 1 , 5-pin
Degree of protection		IP65
Material		
Housing		brass, nickel-plated
Transducer		epoxy resin/hollow glass sphere mixture; polyurethane foam
Installation position		any position
Mass		300 g
Dimensions		
Length		143.5 mm
Diameter		30 mm
Construction type		Cylindrical

Release date: 2025-06-12 Date of issue: 2025-06-14 Filename: 238403_eng.pdf

Connection

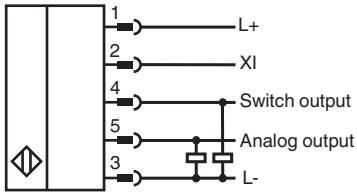

Connection Assignment

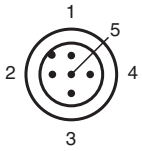

Wire colors in accordance with EN 60947-5-2

1	BN	(brown)
2	WH	(white)
3	BU	(blue)
4	BK	(black)
5	GY	(gray)

Characteristic Curve

Characteristic response curve

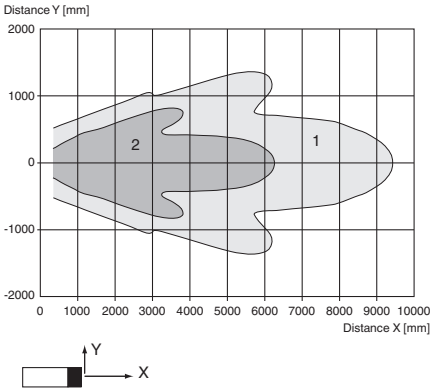

Curve 1: flat surface 100 mm x 100 mm
Curve 2: round bar, Ø 25 mm

Analog output operating mode

Rising ramp

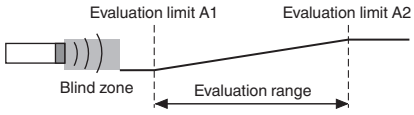

Release date: 2025-06-12 Date of issue: 2025-06-14 Filename: 238403_eng.pdf

Characteristic Curve

Switching output operating mode

Window operation mode

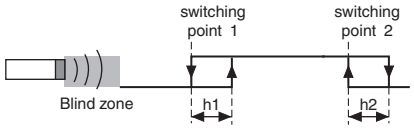

Release date: 2025-06-12 Date of issue: 2025-06-14 Filename: 238403_eng.pdf

Indication

Displays and Controls

The sensor has two potentiometers and two display LEDs.

LED 1 (yellow)	**On/off:** Switching state of switching output **Flashing:** Error when setting the switching points (switching point 2 < switching point 1). This state only occurs in window function operating mode (2 switching points).
LED 2 (yellow)	**On/off:** Object between evaluation limit A1 and evaluation limit A2 in the analog evaluation range.
LED 2 (green)	**approx. 500 ms on:** Range limit taught in **Off:** Normal mode
Potentiometer 1	Setting for switching point 1 of the switching output.
Potentiometer 2	Setting for switching point 2 of the switching output

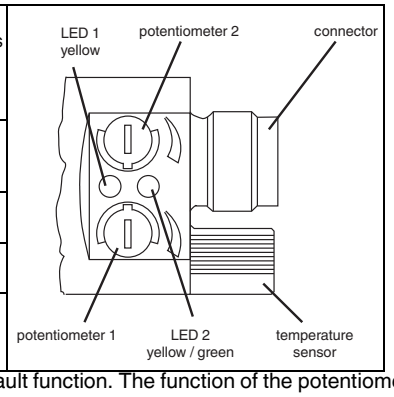

The potentiometer function described illustrates the default function. The function of the potentiometer can be altered using the ULTRA-PROG-IR software. As soon as a configuration has been changed, the potentiometer function selected using ULTRA-PROG-IR is activated.

Function

Setting the Sensor Using the Potentiometers

The sensor is equipped with two potentiometers. These potentiometers are assigned to the switching output by default. The switching output operates in window mode by default (2 switching points). Potentiometer 1 is used to set the near switching point of the switching window. Potentiometer 2 is used to set the distant switching point of the switching window.

Note:

The function of the potentiometer can be altered using the ULTRA-PROG-IR software. As soon as a configuration has been changed, the potentiometer function selected using ULTRA-PROG-IR is activated.

Parameterization

Parameterization via ULTRA-PROG-IR

In order to be able to set the sensor parameters and adjust the sensor to the respective application, the sensor is able to communicate with a PC via the integrated infrared interface. The UC-18/30GM-IR interface cable is required to allow communication via this method. This cable is connected to an unused USB port on the PC.

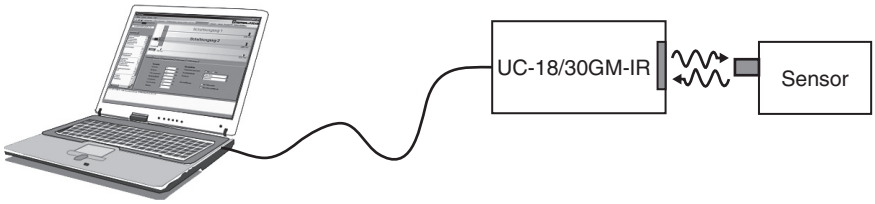

The ULTRA-PROG-IR parameterization software is also required for setting the sensor parameters. The ULTRA-PROG-IR software can be downloaded for free from the **www.pepperl-fuchs.com** website. The software allows all open parameters to be set, including:

- All trip points and switching hystereses
- Output modes and behaviors
- Delay times
- Settings and setting ranges of the potentiometer
- Settings for teach-in and synchronization
- Definition of blind zones
- Sensor modes and measurement methods
- Filtering measurement values

The following service functions are also available:

- Observing and recording measurement values
- Diagnosing interference reflections

Teach-in

The sensor is equipped with a function input (XI). In order to teach in a limit value, this sensor must be parameterized as the Teach-in input using the ULTRA-PROG-IR parameterization software. This parameterization software allows you to specify what limit value is taught in.

Note:

The Teach-in function is not activated when the sensor is delivered.

Description of the Teach-in process:

Release date: 2025-06-12 Date of issue: 2025-06-14 Filename: 238403_eng.pdf

1. Position an object at the required distance.
2. Connect the Teach-in input to L-.
   The green LED lights up briefly after approx. 3 seconds. This indicates that the required distance has been successfully saved.
3. Disconnect the Teach-in input from L-.

Note:
If the Teach-in input remains connected to L-, the Teach-in process is repeated every 3 seconds.

Commissioning

Synchronization

The sensor features a function input (XI). Using the ULTRA-PROG-IR parameterization software, this function input can be configured as a synchronization input to suppress mutual interference from external ultrasonic signals. This is illustrated in the following description.
If the synchronization input is not connected, the sensor operates with internally generated cycle pulses.

External synchronization

The sensor can be synchronized by applying external rectangular pulses. The pulse duration must be ≥ 100 µs. Each rising pulse edge sends an individual ultrasonic pulse. If the signal at the synchronization input is high, the sensor reverts to the normal, unsynchronized operating mode. If a low signal is applied to the synchronization input, the sensor switches to standby. In this operating mode, the last recorded output statuses are retained.

Internal synchronization

Common mode operation

Up to ten sensors can be synchronized with each other. To do this, the synchronization inputs of the individual sensors are connected to each other. When configured in this state, all of the sensors send the ultrasonic signals together at the same time. The cycle rate corresponds to the cycle rate of the sensor with the lowest rate.

Multiplex mode

Up to ten sensors can work in multiplex mode; i.e. the sensors send their ultrasonic signals in succession. This prevents the sensor signals interfering with each other. In multiplex mode, the synchronization inputs of all sensors are connected to each other. An address must also be assigned to each sensor using the ULTRA-PROG-IR parameterization software, and the number of sensors to be synchronized must be determined. To start multiplex mode, all sensors are commissioned together by switching on the power supply.

Release date: 2025-06-12 Date of issue: 2025-06-14 Filename: 238403_eng.pdf