626064 ✔ ACTIVE

FASTIN-FASTON | FASTIN-FASTON 110

TE Internal #: 626064

Crimp Terminal Housings, Receptacle, Receptacle, 2 Position, Straight, Natural, Polyamide, Contact Mating Retention, FASTIN-FASTON 110

View on TE.com >

Terminals & Splices > Terminal Housings, Insulation Sleeves & Blocks > Crimp Terminal Housings







Terminal Type: **Receptacle**

Connector & Housing Type: **Receptacle**

Number of Positions: **2**

Terminal Orientation: **Straight**

Primary Product Color: **Natural**

Features

Product Type Features

Sealable	No
Connector & Housing Type	Receptacle

Configuration Features

Number of Positions	2

Body Features

Primary Product Color	Natural

Contact Features

Terminal Type	Receptacle
Terminal Orientation	Straight
Contact Mating Retention	With

Mechanical Attachment

Mating Alignment	With
Connector Mounting Type	Cable Mount (Free-Hanging)

Housing Features

Housing Material	Polyamide
Centerline (Pitch)	4.6 mm[.181 in]

Dimensions

Product Length	18 mm[.71 in]

Usage Conditions

Operating Temperature Range	-40 - 105 °C[-40 - 221 °F]

Packaging Features

Packaging Quantity	10000
Packaging Method	Carton

Product Compliance

For compliance documentation, visit the product page on TE.com>

EU RoHS Directive 2011/65/EU	Compliant
EU ELV Directive 2000/53/EC	Compliant
China RoHS 2 Directive MIIT Order No 32, 2016	No Restricted Materials Above Threshold
EU REACH Regulation (EC) No. 1907/2006	Current ECHA Candidate List: JAN 2024 (240) Candidate List Declared Against: JAN 2024 (240) Does not contain REACH SVHC
Halogen Content	Low Halogen - Br, Cl, F, I < 900 ppm per homogenous material. Also BFR/CFR/PVC Free
Solder Process Capability	Not applicable for solder process capability

Product Compliance Disclaimer

This information is provided based on reasonable inquiry of our suppliers and represents our current actual knowledge based on the information they provided. This information is subject to change. The part numbers that TE has identified as EU RoHS compliant have a maximum concentration of 0.1% by weight in homogenous materials for lead, hexavalent chromium, mercury, PBB, PBDE, DBP, BBP, DEHP, DIBP, and 0.01% for cadmium, or qualify for an exemption to these limits as defined in the Annexes of Directive 2011/65/EU (RoHS2). Finished electrical and electronic equipment products will be CE marked as required by Directive 2011/65/EU. Components may not be CE marked. Additionally, the part numbers that TE has identified as EU ELV compliant have a maximum concentration of 0.1% by weight in homogenous materials for lead, hexavalent chromium, and mercury, and 0.01% for cadmium, or qualify for an exemption to these limits as defined in the Annexes of Directive 2000/53/EC (ELV). Regarding the REACH Regulation, the information TE provides on SVHC in articles for this part number is based on the latest European Chemicals Agency (ECHA) 'Guidance on requirements for substances in articles' posted at this URL: https://echa.europa.eu/guidance-documents/guidance-on-reach

Compatible Parts



TE Part # 1-626065-2
FF 110 2P HOUSING TAB NATURAL PA6.6 V-0



TE Part # 968864-1
FF 110 REC HSG 2P NYLON NAT



TE Part # 180918
FF 250 REC HSG 2P NYLON CLEAR



TE Part # 626064-5
ISOLADOR

TE Part # 881507-9
FASTIN-ON 2.8,TERMINAL,FAM SLD /UNSLD,CB

Also in the Series | FASTIN-FASTON 110



Automotive Housings(6)

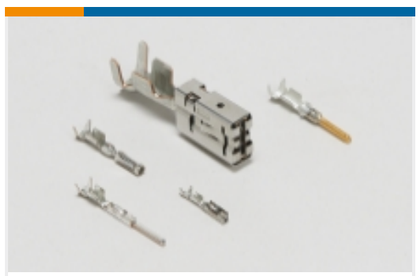

Automotive Terminals(5)



Crimp Terminal Housings(34)



Insertion & Extraction Tools(3)

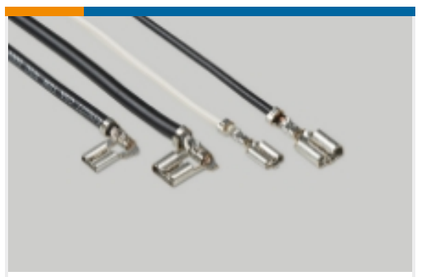

Quick Disconnects(83)

Customers Also Bought



TE Part # 1379675-5
12W TAB HSG ASSY NATURAL

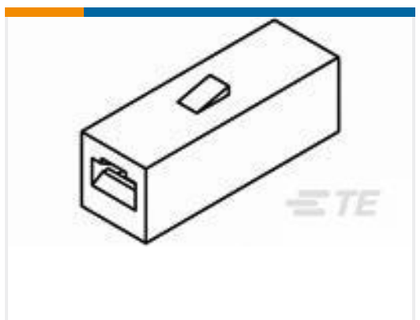

TE Part # 626062
FASTIN-ON HOUSING REC PA66 NATURAL



TE Part # 160655-4
FF 110 REC TERMINAL 20-15 AWG PTPPB



TE Part # EM58926001
RBK-VWS-125-NR1-X-30MM



TE Part # 1803426-2
ANVIL, COMBINATION, NO JOG, END FEED

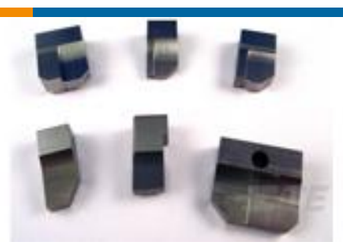

TE Part # 2-1633129-2
ANVIL, COMBINATION .062



TE Part # 2-1803224-4
CRIMPER,WIRE F



TE Part # 2217984-3
ANVIL



TE Part # 2837157-1
OCEAN_2.0_Applicator-S-110F155O-RSM



TE Part # 7-568176-0
CRIMPER, WIRE (.050" 'F')

Documents

Product Drawings

2 WAY FASTIN-ON 110 HOUSING REC PA66 NAT

English

CAD Files

3D PDF

3D

Customer View Model

ENG_CVM_CVM_626064_J.2d_dxf.zip

English

Customer View Model

ENG_CVM_CVM_626064_J.3d_igs.zip

English

Customer View Model

ENG_CVM_CVM_626064_J.3d_stp.zip

English

Customer View Model

ENG_CVM_626064_K1.3d_igs.zip

English

Customer View Model

ENG_CVM_626064_K1.3d_stp.zip

English

Customer View Model

ENG_CVM_626064_K1.2d_dxf.zip

English

3D PDF

English

By downloading the CAD file I accept and agree to the Terms and Conditionsof use.

Datasheets & Catalog Pages

FASTIN_FASTON_Product_Line

English

White Paper: Nylon Discoloration

English

Product Specifications

Application Specification

English