ESD-R-31SR

Aliases (UECESDR31SR000)

KEMET, ESD-R-SR, EMI Cores, Noise Suppression

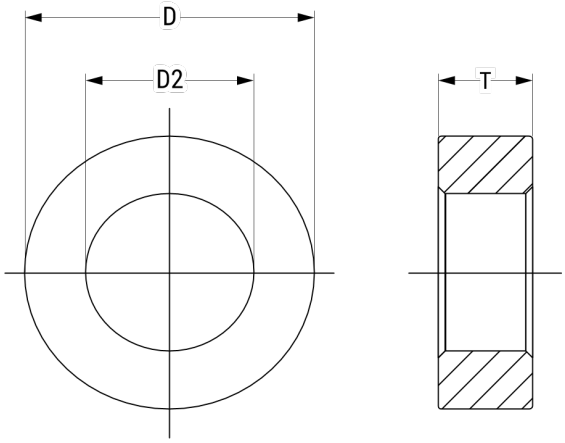

Click here for the 3D model.

Dimensions	
D	31mm MAX
D2	20mm +/-0.8mm
T	14.9mm +/-0.5mm

Packaging Specifications	
Packaging	Tray, Box
Packaging Quantity	300
Typical Component Weight	32.5 g

General Information	
Series	ESD-R-SR
Style	Round - Toroidal
Cable Type	Round Cable
Description	EMI Core Solid, Large-Size Ring Type, For Round Cables
Features	High Impedance, Effectively Suppresses Radiation at 150 kHz, Low Frequency Noise
RoHS	Yes
Qualifications	UL94 V-2
Materials	Mn-Zn

Specifications	
Temperature Range	-25/+85°C
Effective Frequency	10 MHz (AM Band Range)

Statements of suitability for certain applications are based on our knowledge of typical operating conditions for such applications, but are not intended to constitute - and we specifically disclaim - any warranty concerning suitability for a specific customer application or use. This Information is intended for use only by customers who have the requisite experience and capability to determine the correct products for their application. Any technical advice inferred from this Information or otherwise provided by us with reference to the use of our products is given gratis, and we assume no obligation or liability for the advice given or results obtained.

© 2006 - 2024 KEMET