Data sheet

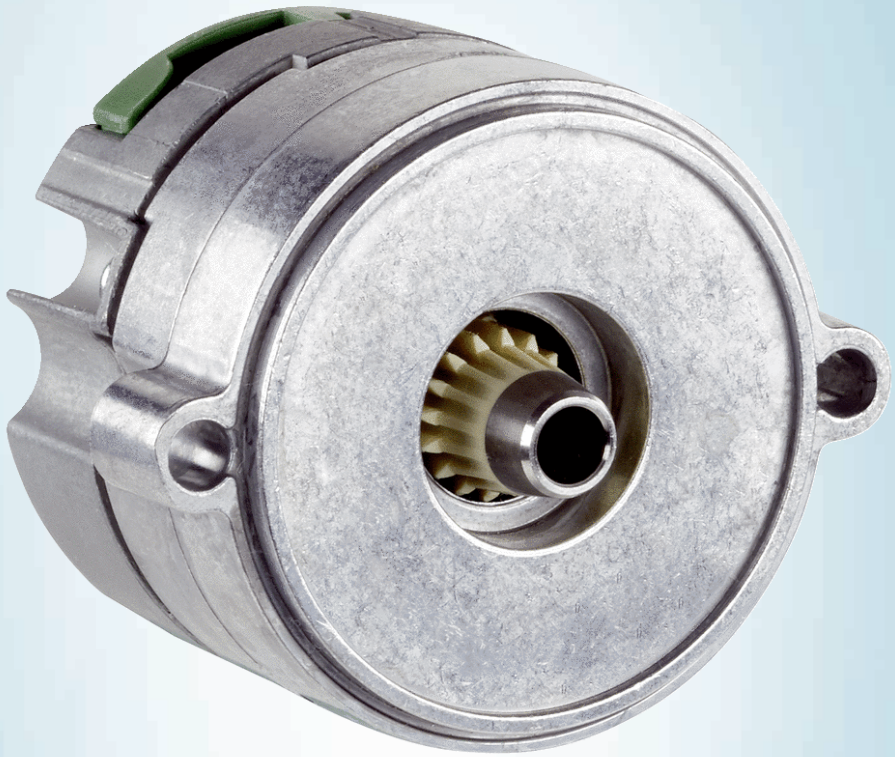

EEM37-2KF0B015A

EES/EEM37-S

SAFE MOTOR FEEDBACK SYSTEMS

SICK
Sensor Intelligence.

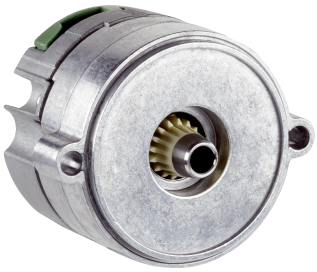

Illustration may differ

Ordering information

Type	part no.
EEM37-2KF0B015A	1086279

Other models and accessories ➜ www.sick.com/EES_EEM37-S

Detailed technical data

Features

Items supplied	M3 mounting screws for encoder housing not included with delivery.

Safety-related parameters

Safety integrity level	SIL 2 (IEC 61508), SILCL3 (EN 62061) [1]
Category	3 (EN ISO 13849)
Systematic suitability	SC 3 (IEC61508)
Test rate	24 h
Maximum demand rate	216 µs
Performance level	PL d (EN ISO 13849)
Basis for safety function	Safe singleturn absolute position
Safety-related resolution	Channel 1 = 15 or 17 bit, channel 2 = 15 or 17 bit
PFH (mean probability of a dangerous failure per hour)	26×10^{-9} [2]
T_M (mission time)	20 years
Safety-related accuracy	1° [3]

[1] For more detailed information on the exact configuration of your machine/unit, please consult your relevant SICK branch office.
[2] The values displayed apply to a diagnostic degree of coverage of 90%, which must be achieved by the external drive system.
[3] The safety-related accuracy indicates the maximum positioning error limit with which the safety functions can be supported.

Performance

Position	
Resolution per revolution	15 bit
System accuracy	± 280 ″, nominal position, 25 °C, filter setting 21 kHz [1]
	± 190 ″, Nominal position, 25 °C, filter setting 1 kHz [1]
Signal noise (σ)	± 20 ″ (nominal position, 25 °C, filter setting 21 kHz)
Number of the absolute ascertainable revolutions	4,096
Available memory area	8,192 Byte

[1] See diagram for error limits (default filter setting: 21 kHz).

Measurement step per revolution	32,768

[1] See diagram for error limits (default filter setting: 21 kHz).

Interfaces

Code sequence	Increasing, when turning the shaft For clockwise rotation, looking in direction “A” (see dimensional drawing)
Communication interface	HIPERFACE DSL®
Initialization time	Max. 500 ms [1]
Measurement external temperature resistance	32-bit value, without prefix (1 Ω) 0 ... 209.600 Ω [2]

[1] From reaching a permitted operating voltage.
[2] Without sensor tolerance; at −17 °C ... +167 °C: NTC +-2K (103 GT); PTC+-3K (KTY84/130/PT1000).

Electronics

Connection type	Male connector, 4-pin
Supply voltage	7 V ... 12 V
Warm-up time voltage ramp	Max. 180 ms [1]
Current consumption	≤ 150 mA [2]

[1] Duration of the voltage ramp between 0 and 7.0 V, see diagram “Current consumption” in the diagram section.
[2] Current rating applies when using interface circuit suggestions as shown in HIPERFACE DSL ® manual (8017595).

Mechanics

Shaft version	Tapered shaft
Dimensions	See dimensional drawing
Centering collar	Reduced 0.7 mm
Weight	≤ 0.1 kg
Moment of inertia of the rotor	1 gcm²
Operating speed	≤ 12,000 min⁻¹
Angular acceleration	≤ 500,000 rad/s²
Permissible radial shaft movement	± 0.15 mm
Permissible axial shaft movement	± 0.5 mm

Ambient data

Operating temperature range	–40 °C ... +115 °C [1]
Storage temperature range	–40 °C ... +120 °C, without package
Relative humidity/condensation	85 %, Condensation not permitted
Resistance to shocks	100 g, 6 ms (according to EN 60068-2-27)
Frequency range of resistance to vibrations	50 g, 10 Hz ... 2,000 Hz (EN 60068-2-6)
EMC	According to EN 61000-6-2: 2016, EN 61000-6-4: 2006, IEC 6100-6-7: 2014 [2]
Enclosure rating	IP30, When cover is closed and mating connector is attached (IEC 60529-1) [3]

[1] For typical values for self-heating, see diagram “Electrical self-heating” in the diagram section. see section “Mounting” in the operating instructions (8021414/8021265).
[2] According to the listed standards, EMC is guaranteed if the motor feedback system with mating connector inserted is connected to the central grounding point of the motor controller via a cable shield. If other shielding concepts are used, users must perform their own tests. Class A device.
[3] When using the strands (2079920).

Certificates

EU declaration of conformity	✓
UK declaration of conformity	✓
ACMA declaration of conformity	✓
China-RoHS	✓
EC-Type-Examination approval	✓
Information according to Art. 3 of Data Act (Regulation EU 2023/2854)	✓

Classifications

ECLASS 5.0	27270590
ECLASS 5.1.4	27270590
ECLASS 6.0	27270590
ECLASS 6.2	27270590
ECLASS 7.0	27270590
ECLASS 8.0	27270590
ECLASS 8.1	27270590
ECLASS 9.0	27270590
ECLASS 10.0	27273805
ECLASS 11.0	27273901
ECLASS 12.0	27273901
ETIM 5.0	EC001486
ETIM 6.0	EC001486
ETIM 7.0	EC001486
ETIM 8.0	EC001486
UNSPSC 16.0901	41112113

Dimensional drawing

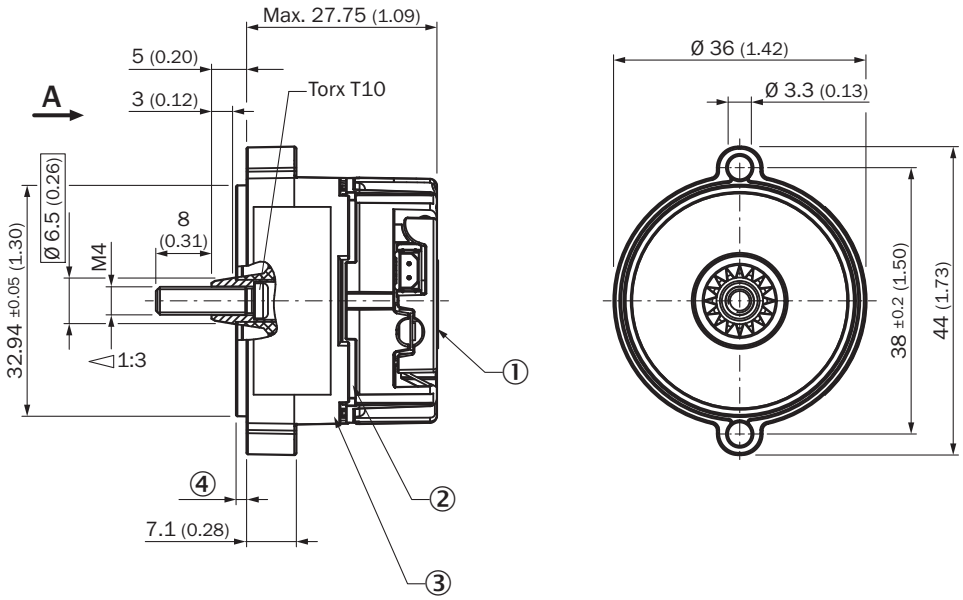

Dimensions in mm (inch)
screw M4 not included (see under accessories)
① measuring point for vibrations
② Design-related gap
③ Measuring point for operating temperature
④ Centering collar: Standard 1.5 mm; reduced 0.7 mm

PIN assignment Supply/Communication pin assignment

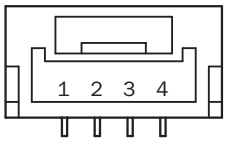

integrated in motor cable = J, K

Recommended accessories

Other models and accessories ➜ www.sick.com/EES_EEM37-S

	Brief description	Type	part no.
Mounting systems			
	• **Description:** Screws with Precote 85-8 coating; M4*14 • **Packing unit:** 100 pieces	BEF-MK-S03	2077358
	• **Description:** Screws with Precote 85-8 coating; M4*14 • **Packing unit:** 10 pieces	BEF-MK-S07	2088239
	• **Description:** Screws with Precote 85-8 coating; M4*14 • **Packing unit:** 500 pieces	BEF-MK-S08	2088240
	• **Description:** Test gauge for SEK/SEL34, SEK/SEL37, and EES/EEM37	BEF-MW-PL	2084768
connectors and cables			
	• **Connection type head A:** Female connector, stranded wire, 4-pin, straight • **Connection type head B:** Flying leads • **Signal type:** HIPERFACE DSL® • **Cable:** 0.2 m, 2-wire • **Description:** HIPERFACE DSL®, unshielded	DOL-0B02-G0M2XC2	2079920

SICK AT A GLANCE

SICK is one of the leading manufacturers of intelligent sensors and sensor solutions for industrial applications. A unique range of products and services creates the perfect basis for controlling processes securely and efficiently, protecting individuals from accidents and preventing damage to the environment.

We have extensive experience in a wide range of industries and understand their processes and requirements. With intelligent sensors, we can deliver exactly what our customers need. In application centers in Europe, Asia and North America, system solutions are tested and optimized in accordance with customer specifications. All this makes us a reliable supplier and development partner.

Comprehensive services complete our offering: SICK LifeTime Services provide support throughout the machine life cycle and ensure safety and productivity.

For us, that is “Sensor Intelligence.”

WORLDWIDE PRESENCE:

Contacts and other locations –www.sick.com