CUI Devices is now Same Sky! Learn More

MODEL: MJ1-2510-SMT-TR | DESCRIPTION: AUDIO JACK

FEATURES

- surface mount
- horizontal
- tip switch
- tape and reel package



RoHS

SPECIFICATIONS

parameter	conditions/description	min	typ	max	units
rated input voltage			12		Vdc
rated input current				1	A
contact resistance	between terminal and mating plug between terminal in a closed circuit			50 30	mΩ mΩ
insulation resistance	at 500 Vdc	100			MΩ
voltage withstand	for 1 minute			500	Vac
insertion/withdrawal force		0.3		3	kg
operating temperature		-25		85	°C
life			5,000		cycles
flammability rating	UL94V-0				
RoHS	yes				

SOLDERABILITY

parameter	conditions/description	min	typ	max	units
reel storage	5~25°C, 20~75% humidity				
reflow soldering	see reflow profile	255	260		°C

Note: 1. Same Sky recommends usage of the product within 24 hours after T&R is opened. After 24 hours, Same Sky recommends drying the parts prior to use.

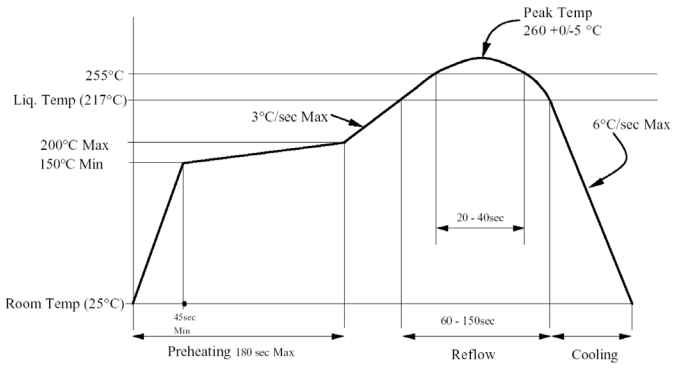

MECHANICAL DRAWING

units: mm
tolerance:
X.X ±0.30 mm
X.XX ±0.25 mm
X.XXX ±0.20 mm
PCB: ±0.05 mm

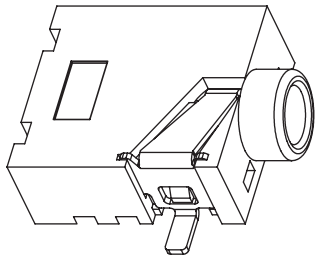

DESCRIPTION	MATERIAL	PLATING/COLOR
terminal 1	copper alloy	gold over nickel
terminal 2	copper alloy	gold over nickel
terminal 4	copper alloy	gold over nickel
housing	PPA (UL94V-0)	black
cover	PPA (UL94V-0)	black

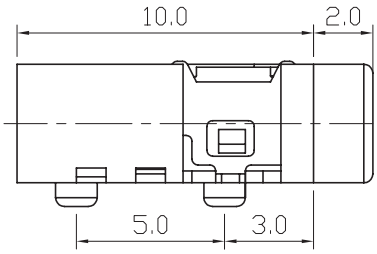

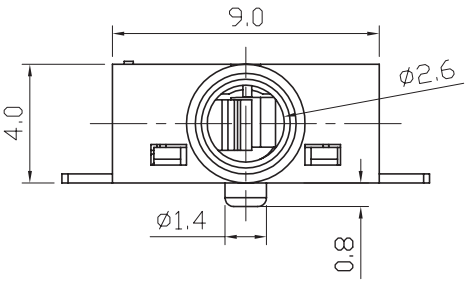

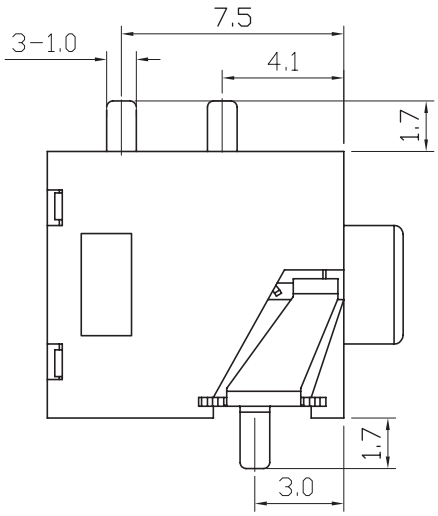

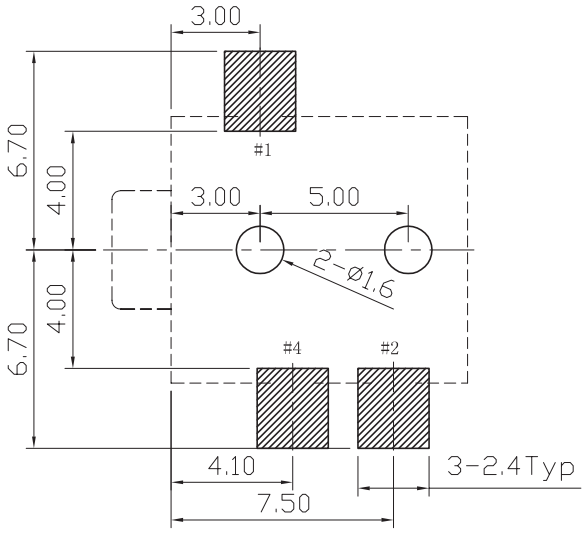

Recommended PCB Layout
Top View

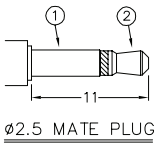

Model No.	MJ1-2510-SMT-TR
Schematic	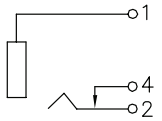
PIN	
1	sleeve
2	tip
4	tip switch

PACKAGING

units: mm

Reel Size: Ø330 mm
Reel QTY: 800 pcs per reel

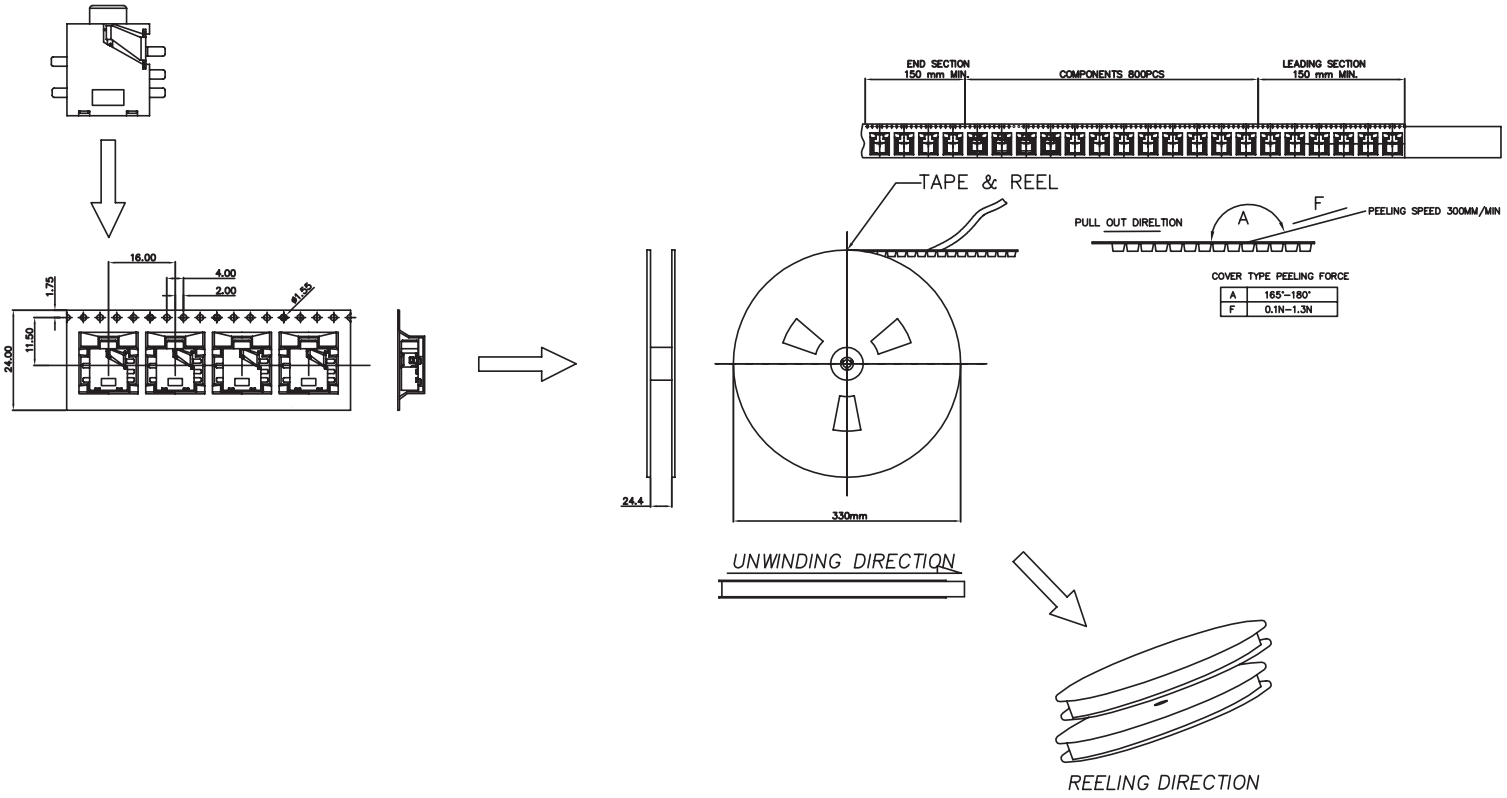

REVISION HISTORY

rev.	description	date
1.0	initial release	11/09/2005
1.01	added TR package option	11/07/2012
1.02	added storage and drying conditions, and tape and reel packaging details	01/12/2018
1.03	brand update	10/04/2019
1.04	product reengineered for improved manufacturability and production yield, see PCN for details	05/23/2023
1.05	CUI Devices rebranded to Same Sky	09/12/2024

The revision history provided is for informational purposes only and is believed to be accurate.

same sky

Same Sky offers a one (1) year limited warranty. Complete warranty information is listed on our website.

Same Sky reserves the right to make changes to the product at any time without notice. Information provided by Same Sky is believed to be accurate and reliable. However, no responsibility is assumed by Same Sky for its use, nor for any infringements of patents or other rights of third parties which may result from its use.

Same Sky products are not authorized or warranted for use as critical components in equipment that requires an extremely high level of reliability. A critical component is any component of a life support device or system whose failure to perform can be reasonably expected to cause the failure of the life support device or system, or to affect its safety or effectiveness.

sameskydevices.com