Data sheet

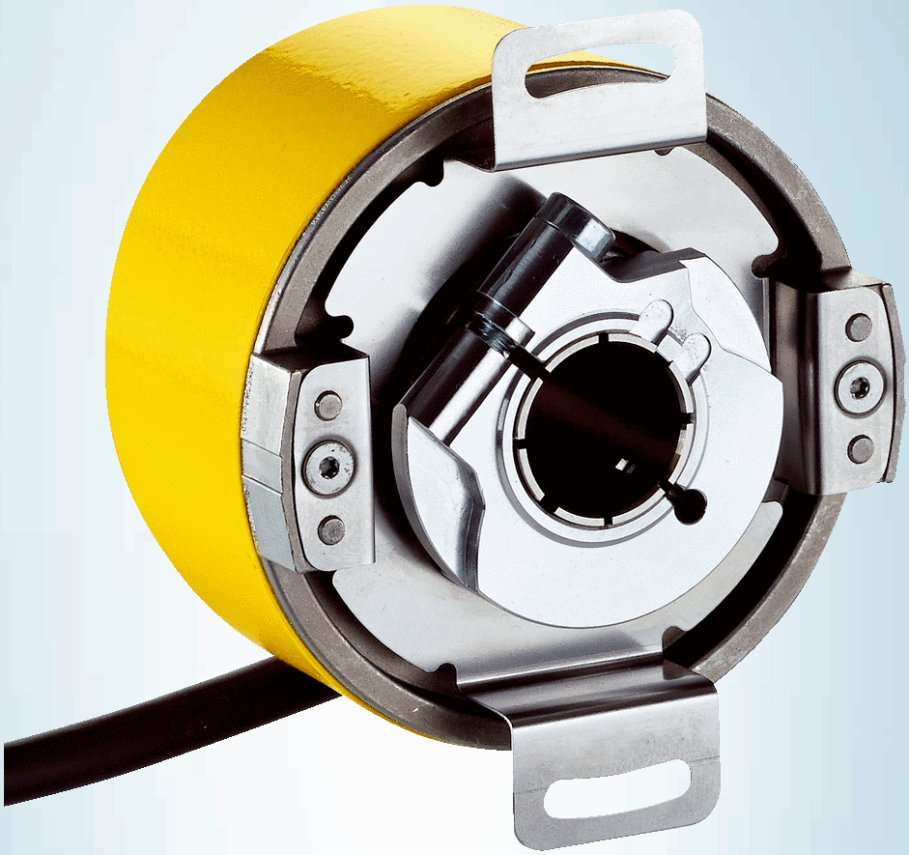

# DFS60S-THOM01024

## DFS60S Pro

SAFETY ENCODERS

SICK
Sensor Intelligence.



Illustration may differ

## Ordering information

| Type | part no. |
|---|---|
| DFS60S-THOM01024 | 1085735 |

Other models and accessories ➜ www.sick.com/DFS60S_Pro

## Detailed technical data

### Safety-related parameters

| | |
|---|---|
| **Safety integrity level** | SIL 2 (IEC 61508), SILCL2 (IEC 62061) [1] |
| **Performance level** | PL d (EN ISO 13849) [1] |
| **Category** | 3 (EN ISO 13849) |
| **PFH (mean probability of a dangerous failure per hour)** | $1.7 \times 10^{-8}$ [2] |
| **$T_M$ (mission time)** | 20 years (EN ISO 13849) |
| **Safety-related measuring step** | 0.09°, Quadrature analysis |
| **Safety-related accuracy** | ± 0.09° |

[1] For more detailed information on the exact configuration of your machine/unit, please consult your relevant SICK branch office.
[2] The stated values apply to a diagnostic coverage of 99%, which must be achieved by the external drive system, and an operating temperature of 95 °C.

### Performance

| | |
|---|---|
| **Sine/cosine periods per revolution** | 1,024 |
| **Measuring step** | 0.3 ″, For interpolation of the sine/cosine signals with e.g. 12 bit [1] |
| **Integral non-linearity** | Typ. ± 45 ″ (without mechanical tension of the stator coupling) |
| **Differential non-linearity** | ± 7 ″ |

[1] Not safety-related.

### Interfaces

| | |
|---|---|
| **Communication interface** | Incremental |
| **Communication Interface detail** | Sin/Cos [1] |
| **Number of signal channels** | 6-channel |
| **Initialization time** | 50 ms [2] |
| **Output frequency** | ≤ 153.6 kHz |

[1] 1.0 $V_{SS}$ (differential).
[2] Valid signals can be read once this time has elapsed.

| | |
|---|---|
| **Power consumption** | ≤ 0.7 W (without load) |
| **Load resistance** | ≥ 120 Ω |

1) 1.0 $V_{SS}$ (differential).

2) Valid signals can be read once this time has elapsed.

## Electronics

| | |
|---|---|
| **Connection type** | Cable, 8-wire, universal, 5 m 1) |
| **Supply voltage** | 4.5 ... 32 V |
| **Reference signal, number** | 1 |
| **Reference signal, position** | 90°, electronically, gated with Sinus and Cosinus |
| **Reverse polarity protection** | ✓ |
| **Protection class** | III (according to DIN EN 61140) |
| **Short-circuit protection of the outputs** | ✓ 2) |

1) The universal cable connection is positioned so that it can be laid in a radial or axial direction without any kinks. UL approval not available.

2) Short-circuit to another channel or GND permitted for max. 30 s. In the case of $U_S$ ≤ 12 V additional short-circuit to $U_S$ permitted for max. 30 s.

## Mechanics

| | |
|---|---|
| **Mechanical design** | Through hollow shaft |
| **Shaft diameter** | 15 mmWith feather key groove |
| **Weight** | Approx. 0.25 kg 1) |
| **Shaft material** | Stainless steel |
| **Flange material** | Die-cast zinc |
| **Housing material** | Aluminum die cast |
| **Start up torque** | ≤ 0.8 Ncm (+20 °C) |
| **Operating torque** | ≤ 0.6 Ncm (+20 °C) |
| **Permissible movement static** | ± 0.3 mm (radial)<br>± 0.5 mm (axial) |
| **Permissible movement dynamic** | ± 0.05 mm (radial)<br>± 0.1 mm (axial) |
| **Operating speed** | ≤ 6,000 $min^{-1}$ 2) |
| **Moment of inertia of the rotor** | 56 $gcm^2$ |
| **Bearing lifetime** | 3.6 x $10^9$ revolutions 3) |
| **Angular acceleration** | ≤ 500,000 $rad/s^2$ |

1) Based on encoder with male connector.

2) Allow for self-heating of approx. 3.0 K per 1,000 rpm regarding the permissible operating temperature.

3) On maximum operating speed and temperature.

## Ambient data

| | |
|---|---|
| **EMC** | According to EN 61000-6-2, EN 61000-6-3 and IEC 61326-3-1 |
| **Enclosure rating** | IP65 (IEC 60529) 1) |
| **Permissible relative humidity** | 90 % (Condensation not permitted) |

1) With plug and mating plug fitted minimum IP65.

2) Allow for self-heating of approx. 3.0 K per 1,000 rpm regarding the permissible operating temperature.

3) Checked to operation with vector length monitoring.

| | |
|---|---|
| **Operating temperature range** | –30 °C ... +85 °C [2] |
| **Storage temperature range** | –30 °C ... +85 °C, without package |
| **Resistance to shocks** | 100 g, 6 ms (EN 60068-2-27) [3] |
| **Resistance to vibration** | 30 g, 10 Hz ... 1,000 Hz (EN 60068-2-6) |

[1] With plug and mating plug fitted minimum IP65.
[2] Allow for self-heating of approx. 3.0 K per 1,000 rpm regarding the permissible operating temperature.
[3] Checked to operation with vector length monitoring.

## Certificates

| | |
|---|---|
| **EU declaration of conformity** | ✓ |
| **UK declaration of conformity** | ✓ |
| **ACMA declaration of conformity** | ✓ |
| **Moroccan declaration of conformity** | ✓ |
| **China-RoHS** | ✓ |
| **EC-Type-Examination approval** | ✓ |
| **Information according to Art. 3 of Data Act (Regulation EU 2023/2854)** | ✓ |

## Classifications

| | |
|---|---|
| **ECLASS 5.0** | 27270501 |
| **ECLASS 5.1.4** | 27270501 |
| **ECLASS 6.0** | 27270590 |
| **ECLASS 6.2** | 27270590 |
| **ECLASS 7.0** | 27270501 |
| **ECLASS 8.0** | 27270501 |
| **ECLASS 8.1** | 27270501 |
| **ECLASS 9.0** | 27270501 |
| **ECLASS 10.0** | 27270501 |
| **ECLASS 11.0** | 27270501 |
| **ECLASS 12.0** | 27270501 |
| **ETIM 5.0** | EC001486 |
| **ETIM 6.0** | EC001486 |
| **ETIM 7.0** | EC001486 |
| **ETIM 8.0** | EC001486 |
| **UNSPSC 16.0901** | 41112113 |

## Dimensional drawing Through hollow shaft, cable

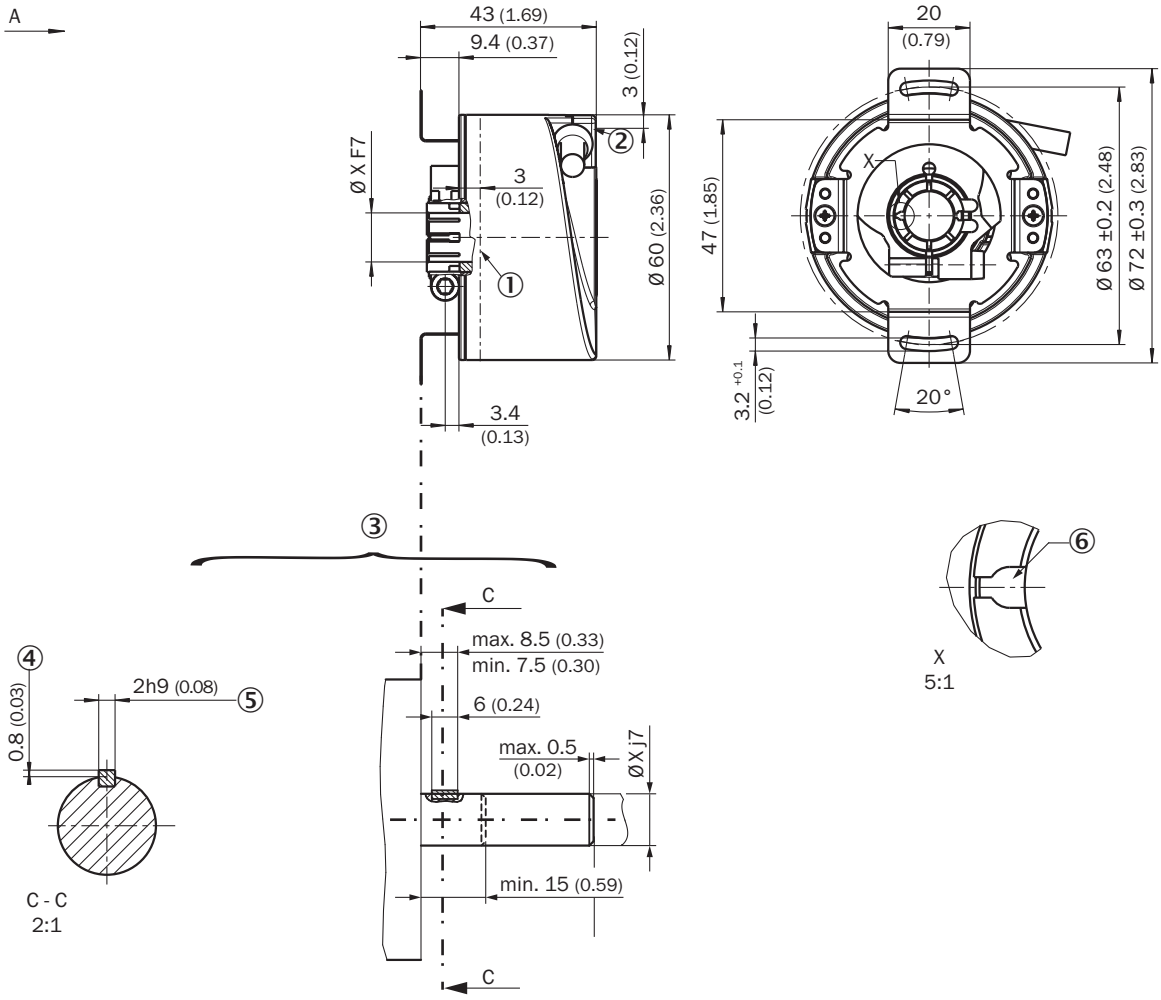


Dimensions in mm (inch)

① operating temperature measuring point (freely selectable, around the housing surface area in each case, approx. 3 mm away from flange)

② measuring point vibration (respectively at the housing face. approx. 3 mm away from the cover edge)

③ Attachment specifications

④ max. 0.4 at Ø 5/8"

⑤ feather key DIN 6885-A 2x2x6

⑥ feather key groove

| Shaft diameter XF7 | Shaft diameter xj7 |
|---|---|
| 6 mm | Provided by customer |
| 8 mm | |
| 3/8″ | |
| 10 mm | |
| 12 mm | |
| 1/2″ | |
| 14 mm | |
| 15 mm | |
| 5/8″ | |

## PIN assignment

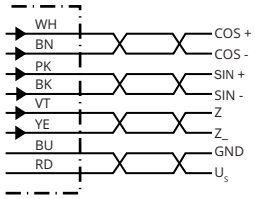

# SICK AT A GLANCE

SICK is one of the leading manufacturers of intelligent sensors and sensor solutions for industrial applications. A unique range of products and services creates the perfect basis for controlling processes securely and efficiently, protecting individuals from accidents and preventing damage to the environment.

We have extensive experience in a wide range of industries and understand their processes and requirements. With intelligent sensors, we can deliver exactly what our customers need. In application centers in Europe, Asia and North America, system solutions are tested and optimized in accordance with customer specifications. All this makes us a reliable supplier and development partner.

Comprehensive services complete our offering: SICK LifeTime Services provide support throughout the machine life cycle and ensure safety and productivity.

**For us, that is “Sensor Intelligence.”**

# WORLDWIDE PRESENCE:

Contacts and other locations –www.sick.com