CPF0603B470KE1 ✔ ACTIVE

Neohm | Neohm CPF

TE Internal #: 1-1879417-1

Precision Resistor, Thin Film, 0603, .063 W, 470K Ω, .1 %, ±25 ppm/°C, Solder, 2 Termination, Height .018 in [.45 mm], Neohm CPF

View on TE.com >

Passive Components > Resistors > Surface Mount Resistors

Resistor Type: **Precision Resistor**

Element Type: **Thin Film**

Package Size Code: **0603**

Power Rating: **.063 W**

Resistance Value: **470K Ω**

Features

Product Type Features

Resistor Type	Precision Resistor
Element Type	Thin Film
Package Size Code	0603

Configuration Features

Number of Resistors	1

Electrical Characteristics

Operating Voltage	50 V
Power Rating	.063 W
Resistance Value	470K Ω
Resistance Class	1kΩ - 1MΩ
Passive Component Tolerance	.1 %

Termination Features

Surface Mount Resistor Termination Type	Solder
Number of Terminations	2

Dimensions

Product Height	.45 mm[.018 in]
Product Length	1.55 mm[.061 in]
Product Width	.8 mm[.031 in]

Usage Conditions

Temperature Coefficient	±25 ppm/°C

Packaging Features

Packaging Method	Taped & Reeled

Product Compliance

For compliance documentation, visit the product page on TE.com>

EU RoHS Directive 2011/65/EU	Compliant
EU ELV Directive 2000/53/EC	Compliant
China RoHS 2 Directive MIIT Order No 32, 2016	No Restricted Materials Above Threshold
EU REACH Regulation (EC) No. 1907/2006	Current ECHA Candidate List: JAN 2024 (240) Candidate List Declared Against: JAN 2024 (240) Does not contain REACH SVHC
Halogen Content	Low Halogen - Br, Cl, F, I < 900 ppm per homogenous material. Also BFR/CFR/PVC Free
Solder Process Capability	Reflow solder capable to 260°C

Product Compliance Disclaimer

This information is provided based on reasonable inquiry of our suppliers and represents our current actual knowledge based on the information they provided. This information is subject to change. The part numbers that TE has identified as EU RoHS compliant have a maximum concentration of 0.1% by weight in homogenous materials for lead, hexavalent chromium, mercury, PBB, PBDE, DBP, BBP, DEHP, DIBP, and 0.01% for cadmium, or qualify for an exemption to these limits as defined in the Annexes of Directive 2011/65/EU (RoHS2). Finished electrical and electronic equipment products will be CE marked as required by Directive 2011/65/EU. Components may not be CE marked. Additionally, the part numbers that TE has identified as EU ELV compliant have a maximum concentration of 0.1% by weight in homogenous materials for lead, hexavalent chromium, and mercury, and 0.01% for cadmium, or qualify for an exemption to these limits as defined in the Annexes of Directive 2000/53/EC (ELV). Regarding the REACH Regulation, the information TE provides on SVHC in articles for this part number is based on the latest European Chemicals Agency (ECHA) 'Guidance on requirements for substances in articles' posted at this URL: https://echa.europa.eu/guidance-documents/guidance-on-reach

Compatible Parts

TE Part # 3-1879216-5
CPF0402 200K 0.1% 25PPM 1K RL

TE Part # 1-1879417-9
CPF 0603 1M0 0.1% 25PPM 1K RL

TE Part # 1879417-8
CPF0603 1M0 0.1% 25PPM 5K RL

TE Part # 1-1614959-4
CPF0805 2M0 0.1% 25PPM 1K RL

TE Part # 9-1879216-1
CPF 0402 158K 0.1% 25PPM 5K RL

Also in the Series | Neohm CPF

Surface Mount Resistors(6124)

Customers Also Bought

TE Part # 4525DO-DS5AI001DP
1IN PCB MOUNT I2C DIFF PRESSURE SENSOR

TE Part # 8-338069-4
MICRO-MATCH SMD FTE

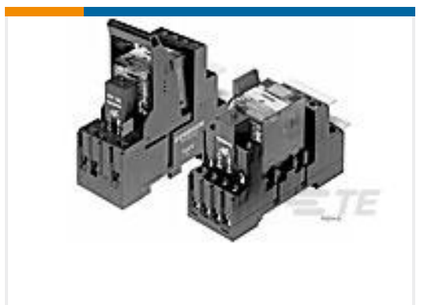

TE Part # 8-1415534-9
PT2L7LC4

TE Part # 6-103635-3
14 MTE HDR SRRA LTCH.100CL LF

TE Part # 1-1437559-8
MTG206N=SWITCH TOG MUSTANG

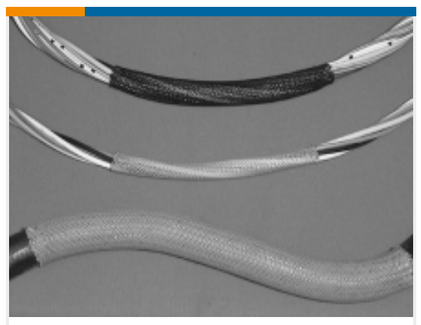

TE Part # CH02014001
VERSAFLEX-1/8-0-SP

TE Part # 2162463004
55A0111-26-0

TE Part # 1-2176578-7
RLC73K 2B R887 1% 5K RL

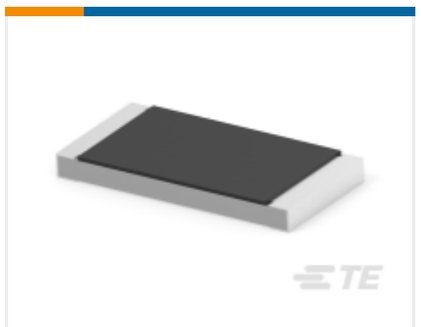

TE Part # 2-2176603-1
RLC73N 3A R068 1% 1K RL

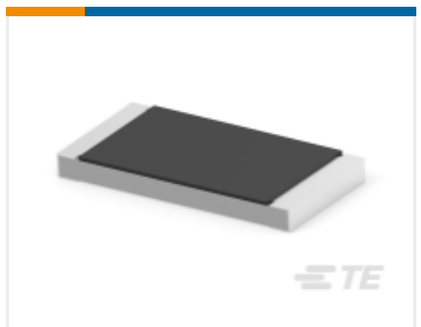

TE Part # 2176603-3
RLC73V 3A R012 1% 1K RL

Documents

Product Drawings

CPF 0603 470K 0.1% 25PPM 1K RL

English

CAD Files

3D PDF

3D

Customer View Model

ENG_CVM_CVM_1-1879417-1_BA.2d_dxf.zip

English

Customer View Model

ENG_CVM_CVM_1-1879417-1_BA.3d_igs.zip

English

Customer View Model

ENG_CVM_CVM_1-1879417-1_BA.3d_stp.zip

English

By downloading the CAD file I accept and agree to the Terms and Conditionsof use.

Datasheets & Catalog Pages

1309350_PASSIVE_COMPONENT

English

CPF-1016

English

8-1773459-4_POWER_FILTERING_AND_RESISTIVE_SOLUTIONS_FOR_ELEVATORS_AND_ESCALATORS

English