NOTES:

1. Material : Music Wire
2. Finish : Glod Irridite
3. Ends : Closed
4. Total Coils : 10.000
5. Sugg. Max. Deflection : 0.110 (in)
6. Sugg. Max. Load : 2.300 (lbs)
7. All Drawing Dimensions are in Inches [mm]



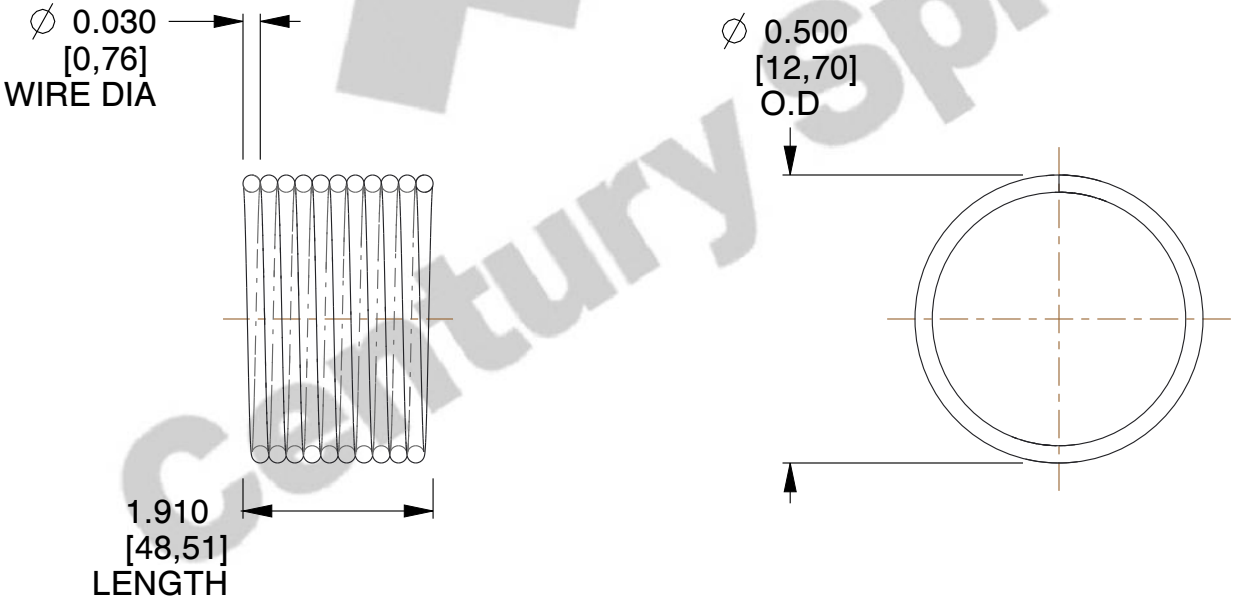

Century Spring

COMPONENT	SPRINGS

Century Spring
www.centuryspring.com 800.237.5225

This file and any associated information and specifications are provided for reference and evaluation purposes only, and is subject to change without notice. MW Industries makes no representations, warranties or guarantees as to the appropriateness, accuracy, completeness, or suitability for any purpose, of the file, information or specifications. You are solely responsible for the use of the file, information or specifications.

This drawing is the property of MW Industries. It contains confidential, proprietary information that is MW Industries property. Do not disclose to or duplicate for others except as authorized by MW Industries.

SCALE	3.000

11772

COMPRESSION SPRINGS

UNIT	INCH [mm]
SHEET	1 of 1