SIEMENS

Data sheet 3RA6920-1C

Control circuit terminals 3RA62 Screw-type technology 2 terminals per pack



General technical data		
product brand name		SIRIUS
protection class IP on the front according to IEC 60529		IP20
touch protection on the front according to IEC 60529		Finger-safe, for vertical contact

Certificates/ approvals

General Product Approval					EMV
UKCA	CE EG-Konf.	Confirmation	UL	EAC	RCM

Marine / Shipping				other	Environment
ABS	DNV	LRS	PRS	Confirmation	Environmental Confirmations

Further information

Information on the packaging
https://support.industry.siemens.com/cs/ww/en/view/109813875
Information- and Downloadcenter (Catalogs, Brochures,…)
https://www.siemens.com/ic10
Industry Mall (Online ordering system)
https://mall.industry.siemens.com/mall/en/en/Catalog/product?mlfb=3RA6920-1C
Cax online generator
http://support.automation.siemens.com/WW/CAXorder/default.aspx?lang=en&mlfb=3RA6920-1C
Service&Support (Manuals, Certificates, Characteristics, FAQs,...)
https://support.industry.siemens.com/cs/ww/en/ps/3RA6920-1C
Image database (product images, 2D dimension drawings, 3D models, device circuit diagrams, EPLAN macros, ...)
http://www.automation.siemens.com/bilddb/cax_de.aspx?mlfb=3RA6920-1C&lang=en

Subject to change without notice
© Copyright Siemens

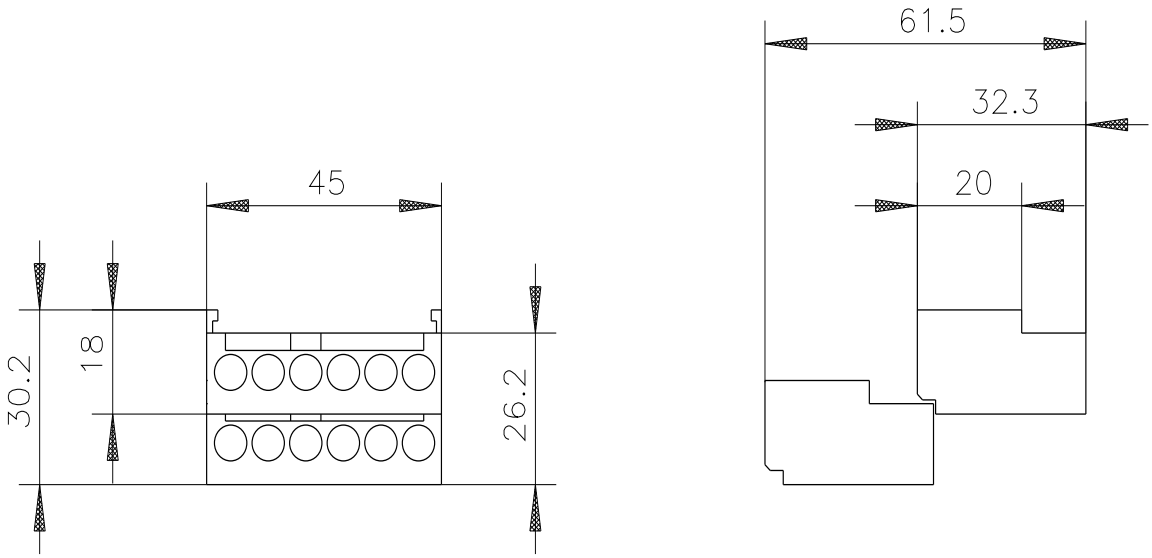

last modified: 1/21/2021

Subject to change without notice
© Copyright Siemens