60FT Premade BNC Video Power Cable for CCTV Security System Plug & Play, In-wall rated.

RoHS Compliant

Stock No.: M1801BD

FEATURES

- 75Ω impedance
- BNC Plug to BNC Plug
- 2.1X5.5mm DC Plug to Jack



Product Description

Siamese Cable - plug and play cable for use with security cameras. The perfect choice for home or business security camera installations. BNC Male to BNC Male + 2.1mm DC Power Male to DC Power Female. In-wall rated fire resistant.

General Specifications

Attribute	Value
Terminated/Unterminated	Terminated
Connector 1	BNC
Connector 2	BNC
Connector 3	2.1X5.5mm DC
Connector 4	2.1X5.5mm DC
Connector 1 Gender	Male
Connector 2 Gender	Male
Connector 3 Gender	Male
Connector 4 Gender	Female
Characteristic Impedance	75 Ω
Length	18.28m
Voltage Rating	24 V ac

Product Drawing

Diagram

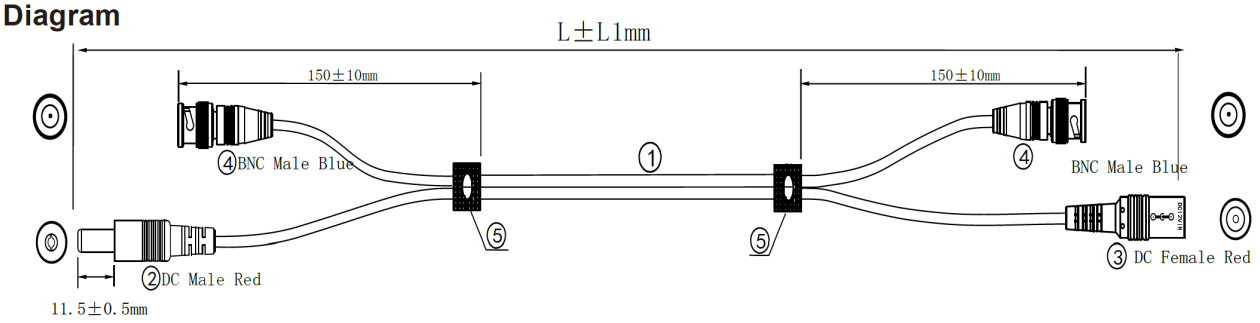

Part Number	L±L1mm
M1801BD	18288±20 mm
M3101BD	30480±20 mm
M5001BD	45720±20 mm
M6101BD	60960±20 mm

Dimensions: Millimeters (Inches)

Part Number Table

Part Number	Description
M1801BD	60FT Premade BNC Video Power Cable for CCTV Security System Plug & Play, In-wall rated.
M3101BD	100FT Premade BNC Video Power Cable for CCTV Security System Plug & Play, In-wall rated.
M5001BD	150FT Premade BNC Video Power Cable for CCTV Security System Plug & Play, In-wall rated.
M6101BD	200FT Premade BNC Video Power Cable for CCTV Security System Plug & Play, In-wall rated.

Important Notice: This data sheet and its contents (the "Information") belong to the members of the EASE group of companies (the "Group") or are licensed to it. No license is granted for the use of it other than for information purposes in connection with the products to which it relates. No license of any intellectual property rights is granted. The Information is subject to change without notice and replaces all data sheets previously supplied. The Information supplied is believed to be accurate, but the Group assumes no responsibility for its accuracy or completeness, any error in or omission from it or for any use made of it. Users of this data sheet should check for themselves the Information and the suitability of the products for their purpose and not make any assumptions based on information included or omitted. Liability for loss or damage resulting from any reliance on the Information or use of it (including liability resulting from negligence or where the Group was aware of the possibility of such loss or damage arising) is excluded. This will not operate to limit or restrict the Group's liability for death or personal injury resulting from its negligence. EASE is the registered trademark of Ease Electronics Co., Limited 2019.