PLC-RPT-230UC/21HC/SO46 - Relay module

1136242

https://www.phoenixcontact.com/us/products/1136242

Please be informed that the data shown in this PDF document is generated from our online catalog. Please find the complete data in the user documentation. Our general terms of use for downloads are valid.



PLC-INTERFACE for protection against interference currents or interference voltages on the control side. Consisting of basic terminal block with Push-in connection and plug-in miniature relay with power contact up to 10 A, 1 changeover contact, 230 V AC input voltage

Commercial data

Item number	1136242
Packing unit	10 pc
Minimum order quantity	10 pc
Sales key	C461
Product key	DK62BM
GTIN	4063151070670
Weight per piece (including packing)	74.4 g
Weight per piece (excluding packing)	74.1 g
Customs tariff number	85364900
Country of origin	DE

Technical data

Notes

Notes on operation	The PLC-ATP partition plate must be installed for voltages greater than 250 V (L1, L2, L3) between identical terminal blocks on adjacent modules.
Notes on operation	The PLC-ATP separating plate should be installed for safe isolation between adjacent modules
Notes on operation	The system installer must ensure the touch protection of the product (at voltages > 25 V AC/60 V DC). The product is a built-in device without protection against direct contact.
Assembly note	The PLC-ATP separating plate is required at the start and end of every PLC terminal strip.

Product properties

Product type	Relay Module
Product family	PLC-INTERFACE
Application	Filter to prevent interference
Operating mode	100% operating factor
Mechanical service life	approx. 3x 10^7 cycles

Insulation characteristics: Air clearances and creepage distances between the power circuits

Insulation	Basic insulation
Overvoltage category	III
Pollution degree	3

Data management status

Date of last data management	21.03.2025

Electrical properties

Maximum power dissipation for nominal condition	2.3 W
Test voltage (Winding/contact)	4 kV_{rms} (50 Hz, 1 min., winding/contact)

Air clearances and creepage distances between the power circuits

Rated insulation voltage	250 V AC
Rated surge voltage	4 kV (Safe isolation, reinforced insulation, and 6 kV between input circuit and output contact current paths)

Input data

Coil side

Nominal input voltage U_N	230 V AC
	220 V DC
Input voltage range	179.4 V AC ... 264.5 V AC (20 °C)
	171.6 V DC ... 253 V DC (20 °C)
Nominal voltage (plugged-in electromechanical relay)	110 V DC
Mains frequency	50/60 Hz

Drive and function	monostable
Drive (polarity)	polarized
Typical input current at U_N	8.5 mA (50 Hz)
	10 mA (60 Hz)
Typical response time	7 ms
Typical release time	10 ms
Typical release voltage	60 V AC
Protective circuit	RC element
	Bridge rectifier
Status display	LED (yellow)

Output data

Switching

Contact switching type	1 changeover contact
Type of switch contact	Single contact
Contact material	AgNi
Maximum switching voltage	250 V AC/DC
Minimum switching voltage	12 V (10 mA)
Limiting continuous current	6 A
	10 A (value applies to connections 12. If connections 12 are bridged, the normal value applies.)
Maximum inrush current	30 A (300 ms, N/O contact)
Min. switching current	10 mA (12 V)
Interrupting rating (ohmic load) max.	144 W (24 V DC)
	240 W (24 V DC, value is valid for connections 12. If connections 12 are bridged, the normal value applies.)
	58 W (48 V DC)
	48 W (60 V DC)
	50 W (110 V DC)
	80 W (220 V DC)
	1500 VA (250 V AC)
	2500 W (250 V AC, value is valid for connections 12. If connections 12 are bridged, the normal value applies.)
Switching capacity	2 A (DC13, 24 V)
	0.2 A (DC13, 250 V)
	6 A (AC15, 24 V)
	6 A (AC15, 250 V)

Connection data

Connection method	Push-in connection
Stripping length	10 mm
Conductor cross-section rigid	0.14 mm² ... 2.5 mm²
Conductor cross-section flexible	0.14 mm² ... 2.5 mm²
	0.2 mm² ... 2.5 mm² (Single ferrule)

	2x 0.5 mm² ... 1 mm² (TWIN ferrule)
Conductor cross-section AWG	26 ... 14

Dimensions

Width	14 mm
Height	80 mm
Depth	94 mm

Material specifications

Color	gray (RAL 7042)

Environmental and real-life conditions

Ambient conditions

Degree of protection (Relay base)	IP20 (Relay base)
Degree of protection (Relay)	RT II (Relay)
Degree of protection (Installation location)	IP54 (Installation location)
Ambient temperature (operation)	-40 °C ... 55 °C
Ambient temperature (storage/transport)	-40 °C ... 85 °C
Altitude	≤ 2000 m

Approvals

CE

Certificate	CE-compliant

UKCA

Certificate	UKCA-compliant

Shipbuilding approval

Certificate	TAE0000196

Corrosive gas test

Identification	ISA-S71.04. G3 Harsh Group
	EN 60068-2-60

Shipbuilding data

Temperature	D
Humidity	A
Vibration	B/C
EMC	B
Enclosure	Required protection according to the Rules shall be provided upon installation on board

EMC data

Electromagnetic compatibility	Conformance with EMC directive
Low Voltage Directive	Conformance with Low Voltage Directive

Standards and regulations

Air clearances and creepage distances between the power circuits

Standards/regulations	IEC 60947-5-1

Mounting

Mounting type	DIN rail mounting
Assembly note	in rows with zero spacing
Mounting position	any

Drawings

Application drawing

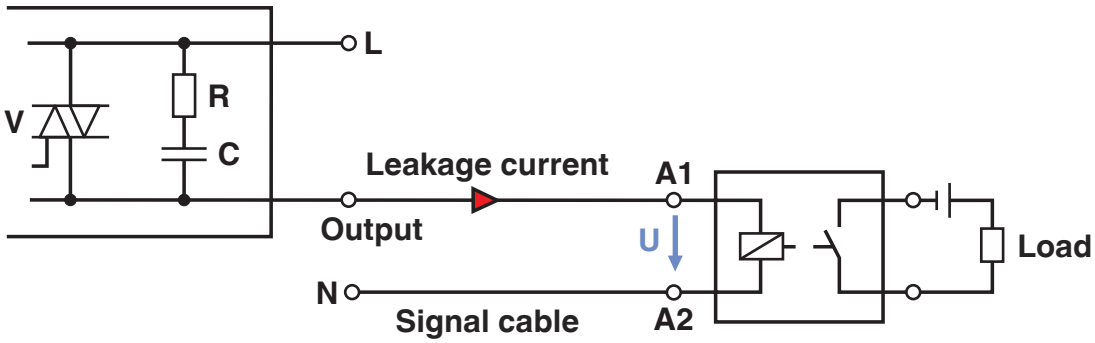

Occurrence of interference signals
Scenario 1: controller - AC output card

Application drawing

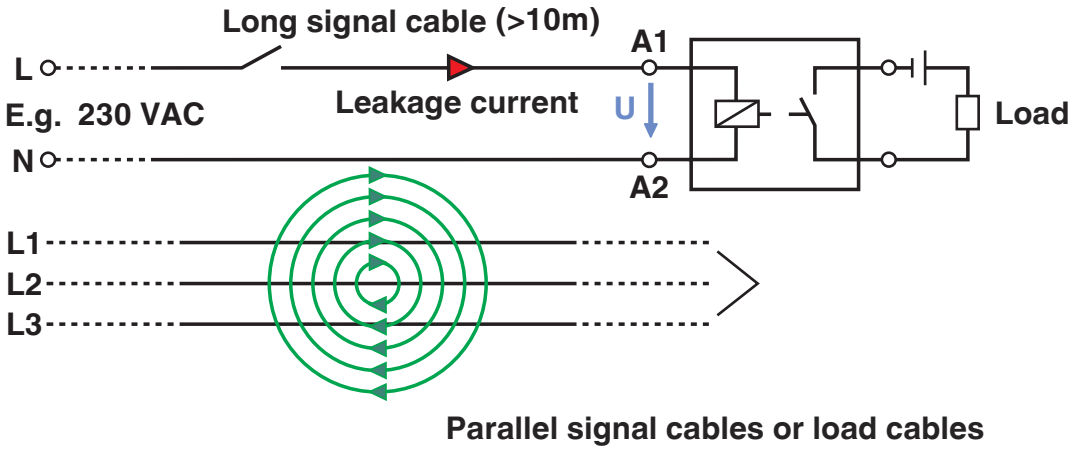

Occurrence of interference signals
Scenario 2: long signal cables

Diagram

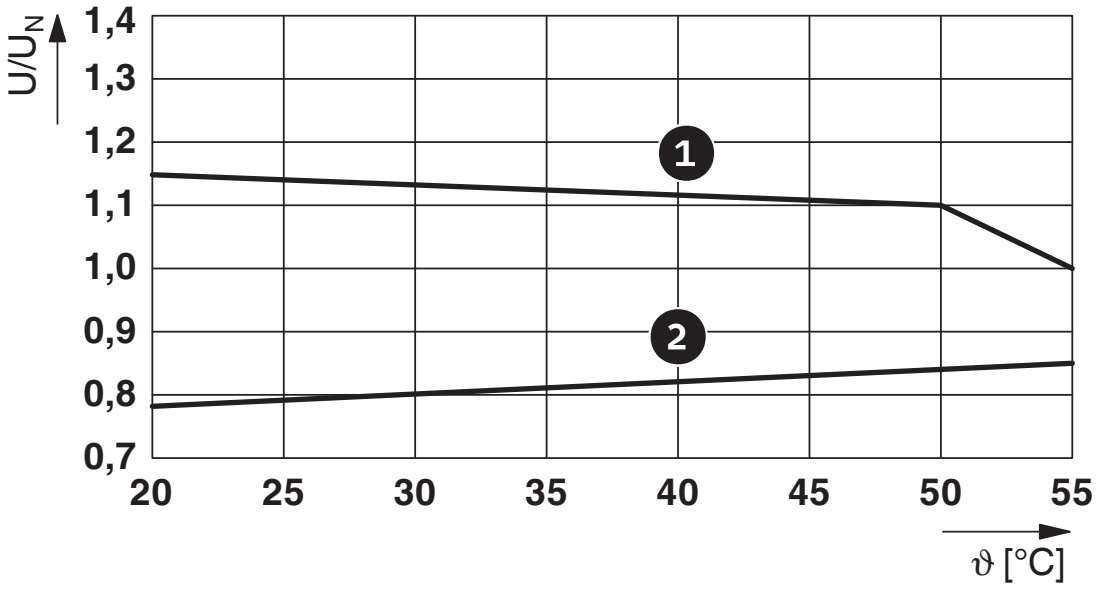

❶ maximum continuous voltage U_{max} at I_K=10 A
❷ minimum pick-up voltage U_{an} with pre-energization with U_N at limiting continuous current I_K=10 A

Diagram

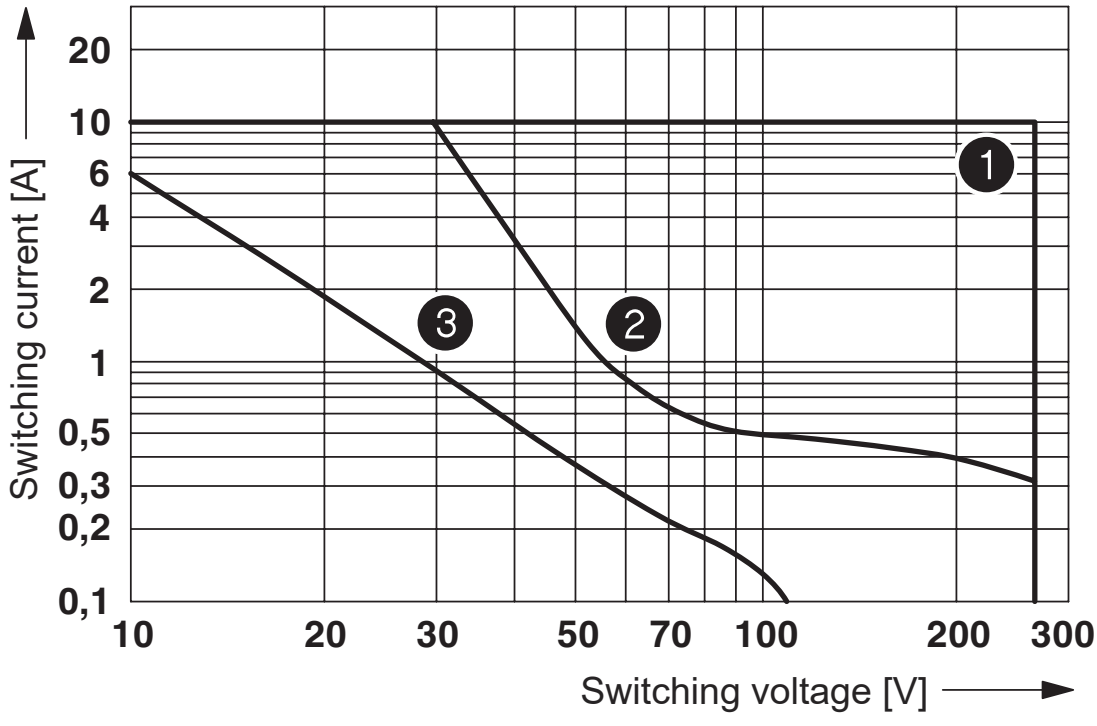

❶ AC, ohmic load
❷ DC, ohmic load
❸ DC, L/R = 40 ms

Interrupting rating

Diagram

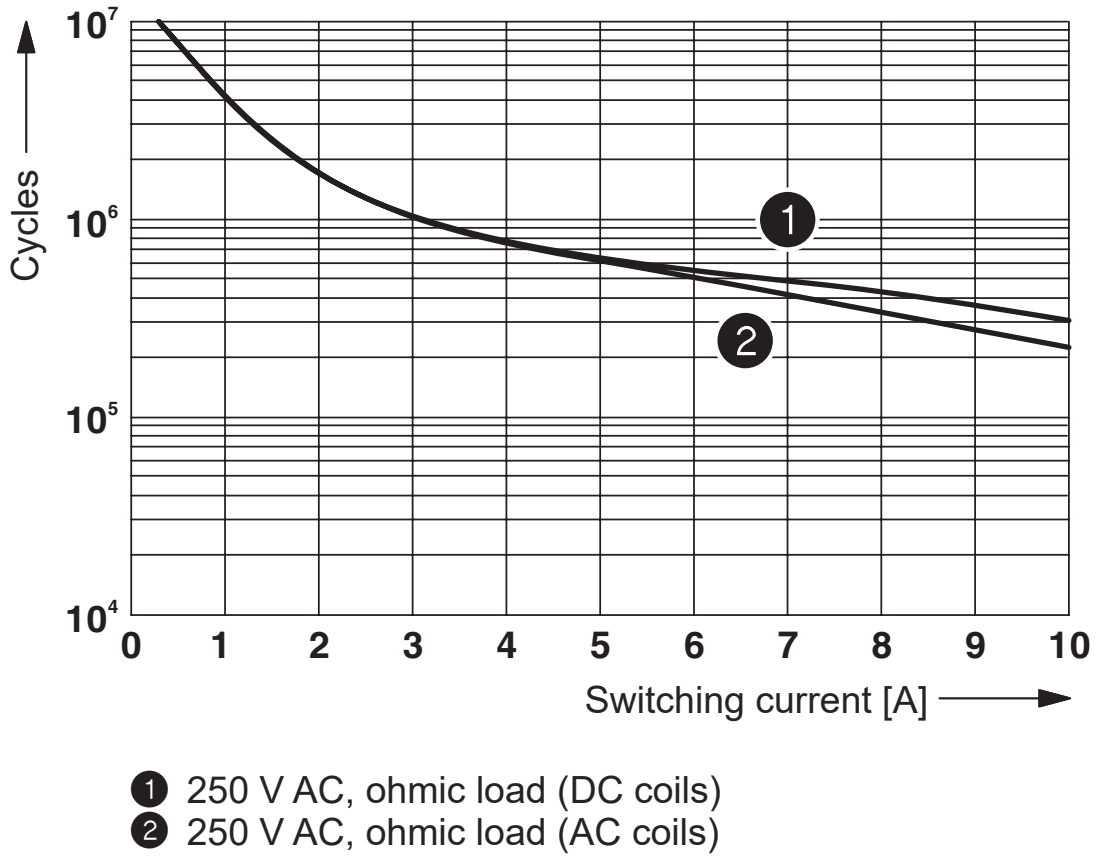

1 250 V AC, ohmic load (DC coils)
2 250 V AC, ohmic load (AC coils)

Electrical service life

Diagram

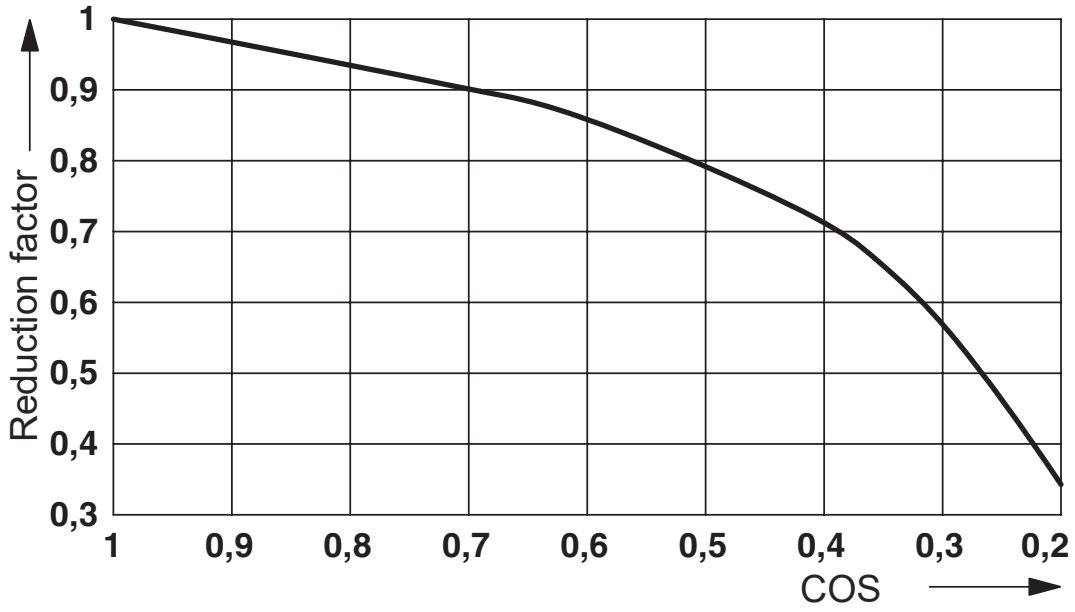

Service life reduction factor

Diagram

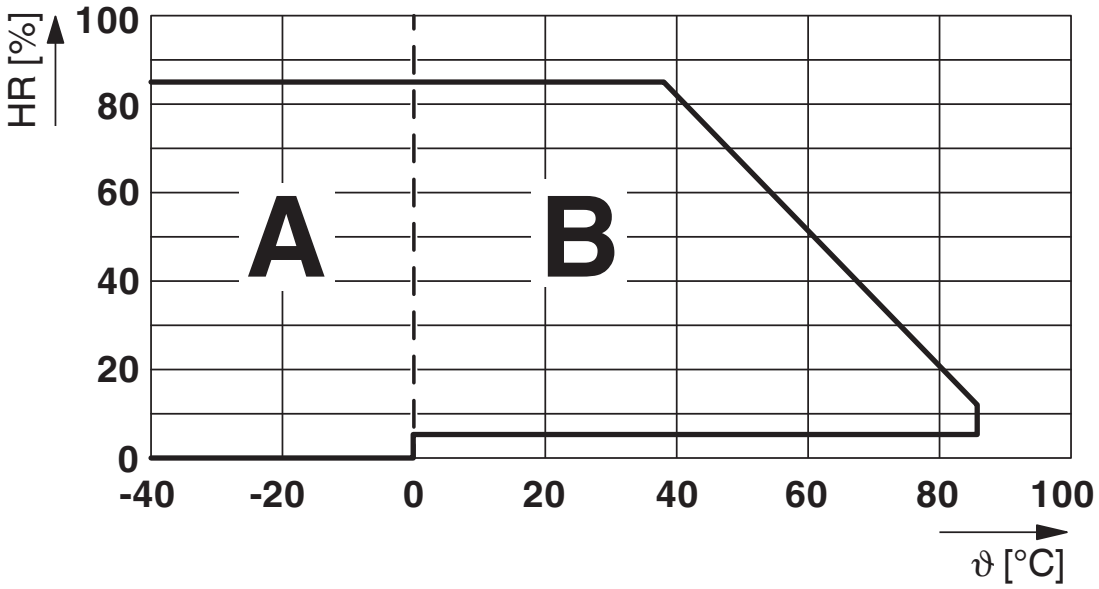

Permissible humidity for operation and storage.
The maximum permissible ambient temperature as specified in the data sheet must be observed.

Area A: Ice buildup at ambient temperatures ≤ 0°C must be prevented
Area B: Condensation at ambient temperatures > 0°C must be prevented

On 30 full days that are naturally distributed across an entire year, a humidity level of 95% is permissible at an ambient temperature ≤ 25°C.

Approvals

To download certificates, visit the product detail page: https://www.phoenixcontact.com/us/products/1136242

EAC
Approval ID: RU*C-DE.*08.B.00010

EAC
Approval ID: RU D-DE.B*00573/18

DNV GL
Approval ID: TAE0000196

cULus Listed
Approval ID: E140324

Classifications

ECLASS

ECLASS-13.0	27371601
ECLASS-15.0	27371601

ETIM

ETIM 9.0	EC001437

UNSPSC

UNSPSC 21.0	39122300

Environmental product compliance

EU RoHS

Fulfills EU RoHS substance requirements	Yes
Exemption	7(a), 7(c)-I

China RoHS

Environment friendly use period (EFUP)	EFUP-50
	An article-related China RoHS declaration table can be found in the download area for the respective article under "Manufacturer declaration". For all articles with EFUP-E, no China RoHS declaration table issued and required.

EU REACH SVHC

REACH candidate substance (CAS No.)	Hexahydromethylphthalic anhydride(CAS: n/a)
	Lead(CAS: 7439-92-1)
SCIP	6dd2285c-3fdc-4cb0-b4c2-31e7fac23a95

Phoenix Contact 2025 © - all rights reserved
https://www.phoenixcontact.com

Phoenix Contact USA
586 Fulling Mill Road
Middletown, PA 17057, United States
(+717) 944-1300
info@phoenixcon.com