HC-B-TA-NPT-3/4-ER-AL - Adapter

1414265

https://www.phoenixcontact.com/us/products/1414265

Please be informed that the data shown in this PDF document is generated from our online catalog. Please find the complete data in the user documentation. Our general terms of use for downloads are valid.



Adapter, aluminum, for EVO housing, NPT-3/4" thread

Commercial data

Item number	1414265
Packing unit	1 pc
Minimum order quantity	1 pc
Sales key	BF57
Product key	BF7APM
Catalog page	Page 661 (C-2-2019)
GTIN	4055626022277
Weight per piece (including packing)	119.3 g
Weight per piece (excluding packing)	119 g
Customs tariff number	85389099
Country of origin	DE

Technical data

Product properties

Product type	Thread adapter
Application	Bayonet B - NPT

Connection data

Tightening torque	... 13 Nm

Dimensions

Dimensional drawing	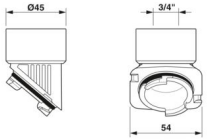
Thread type on seal side	3/4 inch NPT

Internal dimensions

Length of internal thread	18 mm

Material specifications

Color	aluminum
Material	Die-cast aluminum, corrosion-resistant
Seal material	NBR
Housing material	Die-cast aluminum, corrosion resistant

Environmental and real-life conditions

Ambient conditions

Degree of protection	IP66
	IP67
Enclosure rating (NEMA)	4 (UL 50e)
	4X (UL 50e)
	12 (UL 50e)
Ambient temperature (operation)	-40 °C ... 125 °C

Drawings

Dimensional drawing

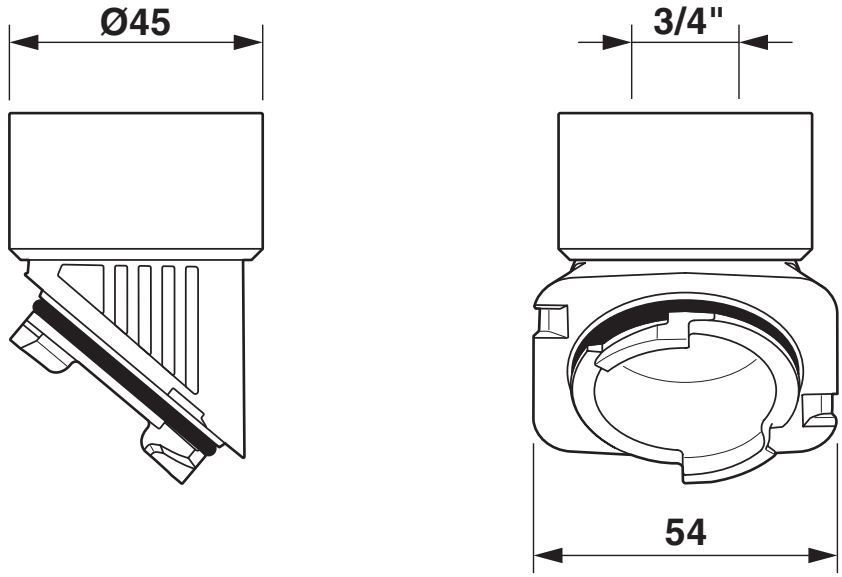

Dimensional drawing

Approvals

To download certificates, visit the product detail page: https://www.phoenixcontact.com/us/products/1414265

DNV
Approval ID: TAE000037S

cUL Recognized
Approval ID: E255026

UL Recognized
Approval ID: E255026

EAC
Approval ID: RU C-DE.AI30.B.01102

cULus Recognized

Classifications

ECLASS

ECLASS-11.0	27144432
ECLASS-12.0	27140801
ECLASS-13.0	27140801

ETIM

ETIM 9.0	EC000441

UNSPSC

UNSPSC 21.0	39121400

Environmental product compliance

EU RoHS

Fulfills EU RoHS substance requirements	Yes, No exemptions

China RoHS

Environment friendly use period (EFUP)	EFUP-E
	No hazardous substances above the limits

EU REACH SVHC

REACH candidate substance (CAS No.)	No substance above 0.1 wt%

Accessories

G-INS-NPT3/4-M68L-NNES-S - Cable gland

1411184

https://www.phoenixcontact.com/us/products/1411184



Cable gland, material for screw connection: Brass, nickel-plated, application: Standard, external cable diameter 13 mm ... 18 mm, shielding: no, connecting thread: 3/4 inch NPT, color: silver, with O-ring

Phoenix Contact 2024 © - all rights reserved
https://www.phoenixcontact.com

Phoenix Contact USA
586 Fulling Mill Road
Middletown, PA 17057, United States
(+717) 944-1300
info@phoenixcon.com