MODEL: UJ32-C-H-G-SMT-TR | DESCRIPTION: USB RECEPTACLE

FEATURES

- USB Type C receptacle
- USB 3.2 Gen 2x2
- 20 Gbit/s data transfer speed
- reflow solder compatible
- tape & reel packaging



RoHS

SPECIFICATIONS

parameter	conditions/description	min	typ	max	units
USB standard	USB 3.2 Gen 2x2				
rated input voltage				20	Vdc
rated input current	as per EIA-364-70, Method B power pins collectively (A1, A4, A9, A12, B1, B4, B9, B12) VCONN pins individually (A5, B5) all other signal pins individually			 5.0 1.25 0.25	 A A A
contact resistance[1]	between terminals and mating plug			40	mΩ
insulation resistance	between adjacent contacts	100			MΩ
voltage withstand	between adjacent contacts	100			Vac
insertion force	at a rate of 12.5 mm/min	5		20	N
withdrawal force	at a rate of 12.5 mm/min	8		20	N
life	at a rate of 200 cycles per hour		10,000		cycles
operating temperature		-40		85	°C
flammability rating	UL94V-0				
RoHS	yes				

Note: 1. When measured at 20 mV / 100 mA.
2. All specifications measured at 10~35°C, humidity at 45~85%, under standard atmospheric pressure, unless otherwise noted.

SOLDERABILITY

parameter	conditions/description	min	typ	max	units
reel storage	at relative humidity 65~70%	25		30	°C
reflow soldering[3]	see reflow profile		255	260	°C

Note: 3. It is recommended to reflow solder within 3 months from opening vacuum packaging at a temperature of 25~30°C & relative humidity 65~70%.

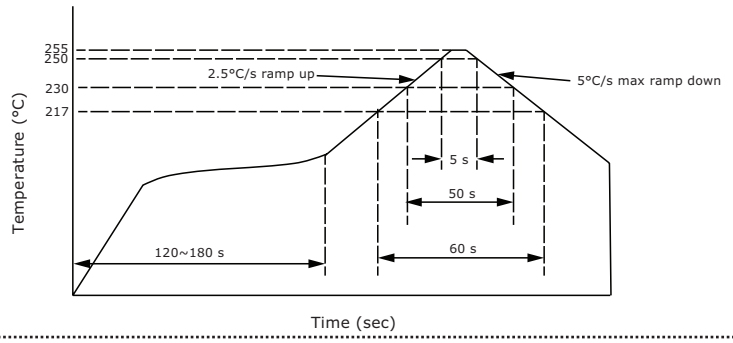

MECHANICAL DRAWING

units: mm
tolerance:
X. ±0.50 mm
X.X ±0.30 mm
X.XX ±0.20 mm
X.XXX ±0.10 mm
unless otherwise noted

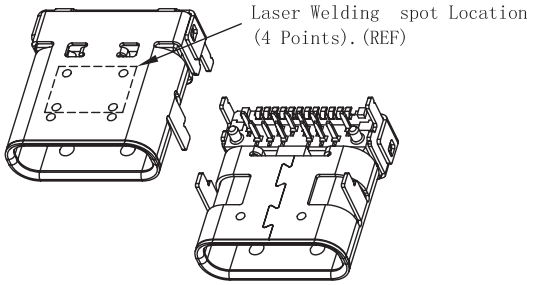

	MATERIAL	PLATING
insulator	LCP (UL94V-0)	black
contact	copper alloy	contact area: gold flash solder area: matte tin over nickel
shell	stainless steel	nickel
cover shell	iron	nickel
inner ground cover shell	stainless steel	nickel
mid plate	stainless steel	clean

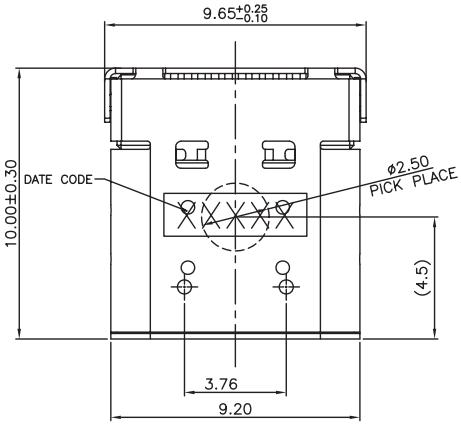

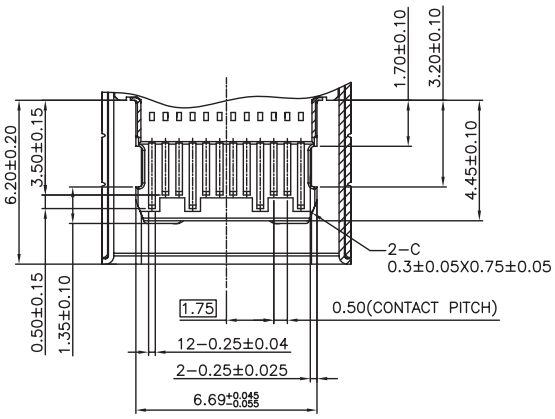

SECTION B−B

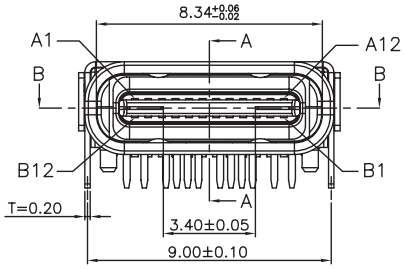

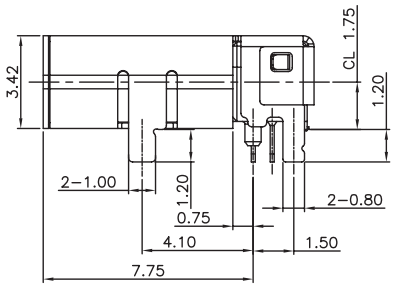

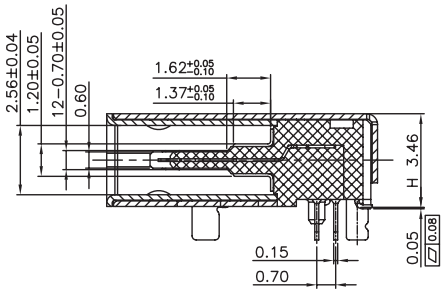

SECTION A−A

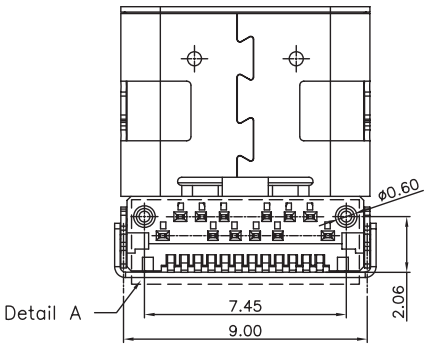

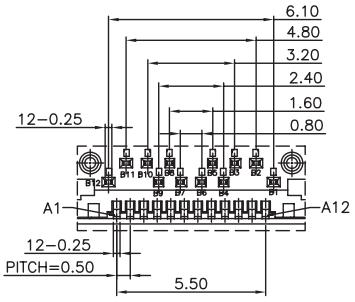

Detail A

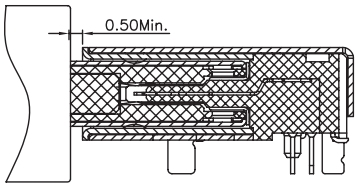

MATING CONDITION

MECHANICAL DRAWING (CONTINUED)

units: mm
PCB tolerance: ±0.05 mm
PCB thickness: 1.0 mm

PIN CONNECTIONS					
PIN	SIGNAL NAME	MATING SEQUENCE	PIN	SIGNAL NAME	MATING SEQUENCE
A1	GND	FIRST	B12	GND	FIRST
A2	SSTXp1	SECOND	B11	SSRXp1	SECOND
A3	SSTXn1	SECOND	B10	SSRXn1	SECOND
A4	V_{BUS}	FIRST	B9	V_{BUS}	FIRST
A5	CC1	SECOND	B8	SBU2	SECOND
A6	Dp1	SECOND	B7	Dn2	SECOND
A7	Dn1	SECOND	B6	Dp2	SECOND
A8	SBU1	SECOND	B5	CC2	SECOND
A9	V_{BUS}	FIRST	B4	V_{BUS}	FIRST
A10	SSRXn2	SECOND	B3	SSTXn2	SECOND
A11	SSRXp2	SECOND	B2	SSTXp2	SECOND
A12	GND	FIRST	B1	GND	FIRST
SHELL		GND	SHELL		GND

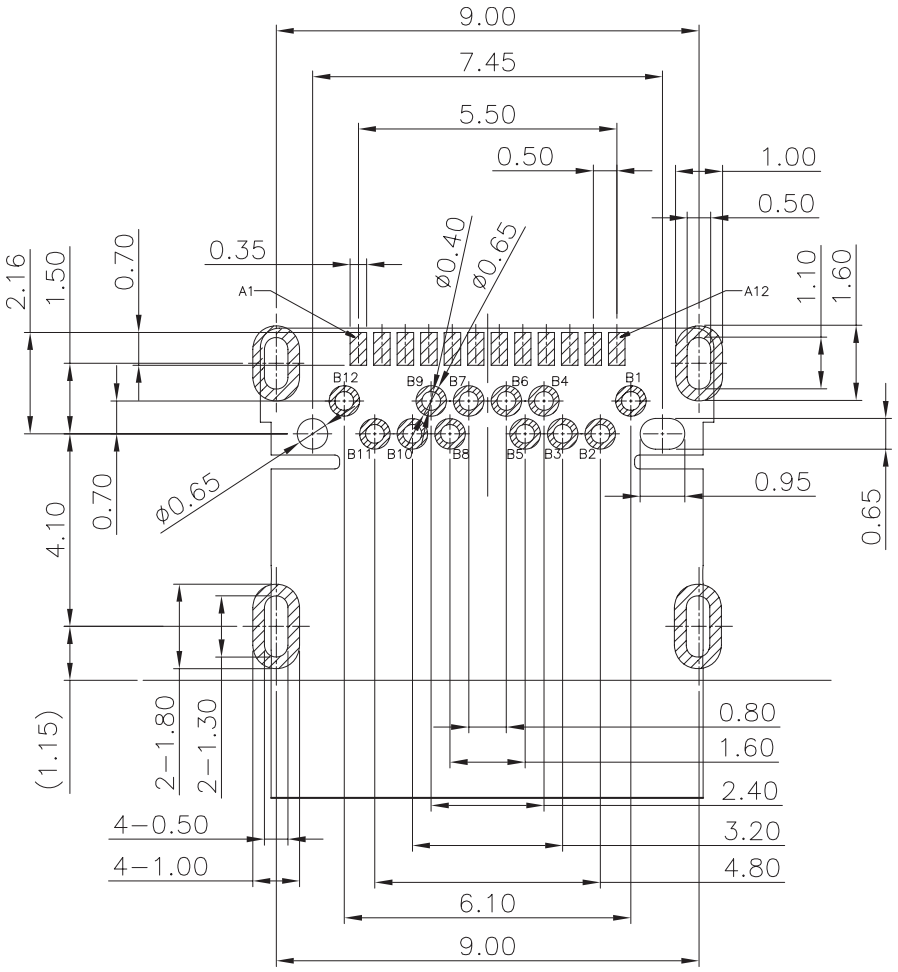

Recommended PCB Layout
Top View

PACKAGING

units: mm

Reel Size: Ø380 mm
Reel QTY: 1,000 pcs per reel
Carton Size: 405 x 405 x 330
Carton QTY: 8,000 pcs

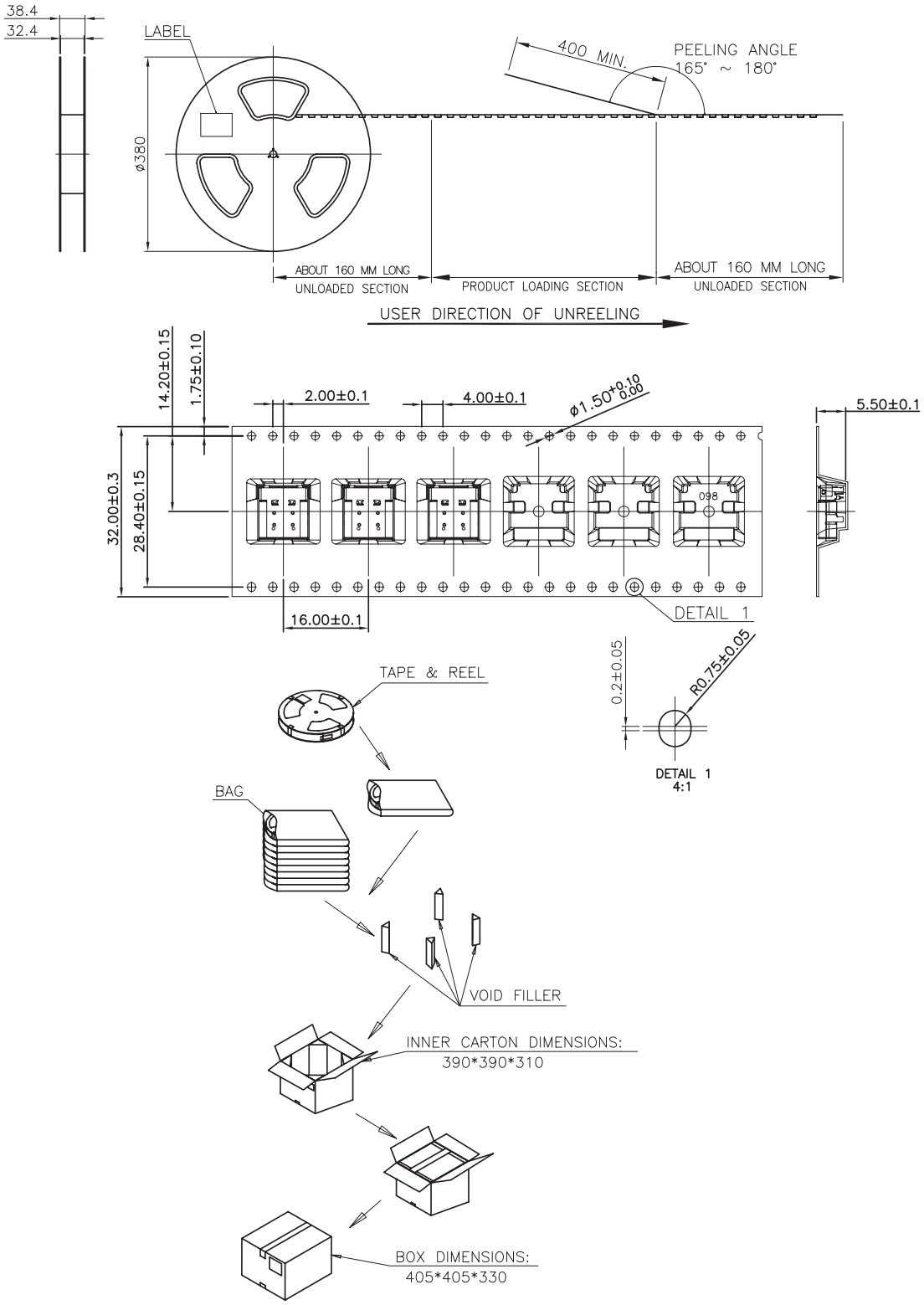

REVISION HISTORY

rev.	description	date
1.0	initial release	06/15/2022
1.01	logo, datasheet style update	08/05/2022

The revision history provided is for informational purposes only and is believed to be accurate.

CUI Devices offers a one (1) year limited warranty. Complete warranty information is listed on our website.

CUI Devices reserves the right to make changes to the product at any time without notice. Information provided by CUI Devices is believed to be accurate and reliable. However, no responsibility is assumed by CUI Devices for its use, nor for any infringements of patents or other rights of third parties which may result from its use.

CUI Devices products are not authorized or warranted for use as critical components in equipment that requires an extremely high level of reliability. A critical component is any component of a life support device or system whose failure to perform can be reasonably expected to cause the failure of the life support device or system, or to affect its safety or effectiveness.

cuidevices.com