Inductive power clamp sensor

NBN2-F581-270S15-E8-V1

- Extremely bright triple luminous band indication
- M12 plug with safety screw assembly adjustable in 45° grid
- For use in direct- and alternating-field welding systems
- Completely halogen and silicon free

Dimensions

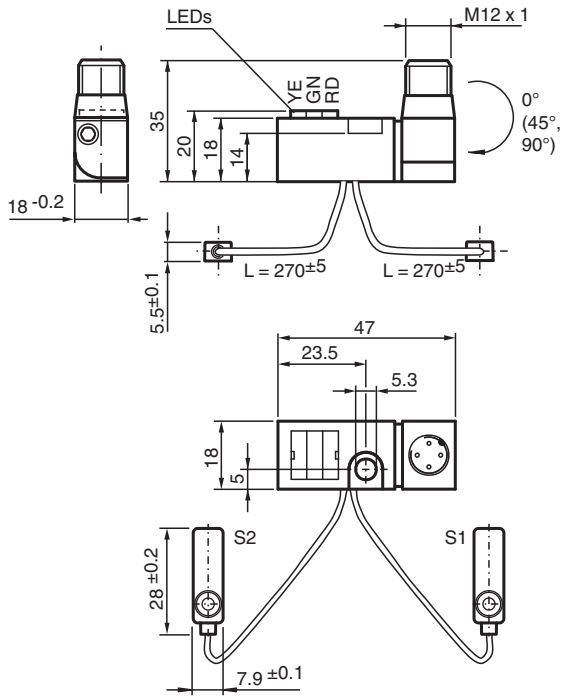

Technical Data

General specifications		
Switching function		2 x normally open (NO)
Output type		PNP
Rated operating distance	s_n	2 mm
Installation		non-flush
Output polarity		DC
Assured operating distance	s_a	0 ... 1.62 mm
Reduction factor r_{Al}		0.45
Reduction factor r_{Cu}		0.35
Reduction factor r_{304}		0.75
Output type		4-wire
Nominal ratings		
Operating voltage	U_B	10 ... 30 V DC
Switching frequency	f	0 ... 100 Hz
Reverse polarity protection		reverse polarity protected

Release date: 2025-05-21 Date of issue: 2025-05-21 Filename: 201455_eng.pdf

Technical Data

Short-circuit protection		pulsing
Voltage drop	U_d	≤ 3 V
Operating current	I_L	0 ... 100 mA
No-load supply current	I_0	≤ 15 mA
Constant magnetic field	B	100 mT
Alternating magnetic field	B	100 mT
Tuning-out		typically 1 s
Operating voltage indicator		LED green
Switching state indicator		Switching state "closed" = LED red (S2) switching state "open" = LED yellow (S1)
Functional safety related parameters		
$MTTF_d$		1445 a
Mission Time (T_M)		20 a
Diagnostic Coverage (DC)		0 %
Compliance with standards and directives		
Standard conformity		
Standards		EN IEC 60947-5-2
Approvals and certificates		
UL approval		cULus Listed, General Purpose
CCC approval		CCC approval / marking not required for products rated ≤36 V
Ambient conditions		
Ambient temperature		0 ... 50 °C (32 ... 122 °F)
Storage temperature		-40 ... 85 °C (-40 ... 185 °F)
Mechanical specifications		
Connection type		Connector plug
Flexible lead, housing-sensor		PUR (halogen-free)
Housing material		PBT/PA6 + GD-ZN AL4
Sensing face		PBT
Degree of protection		IP65
Connector		
Threading		M12 x 1
Number of pins		4
Dimensions		
Length		28 mm

Connection

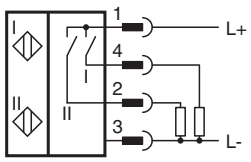

Release date: 2025-05-21 Date of issue: 2025-05-21 Filename: 201455_eng.pdf

Connection Assignment

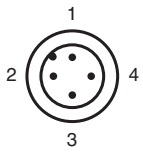

Wire colors in accordance with EN 60947-5-2

1	BN	(brown)
2	WH	(white)
3	BU	(blue)
4	BK	(black)

Release date: 2025-05-21 Date of issue: 2025-05-21 Filename: 201455_eng.pdf