CUI Devices is now Same Sky! Learn More

MODEL: PJ1-021-SMT-TR | DESCRIPTION: DC POWER JACK

FEATURES

- 1.65mm center pin
- 5 A rating
- right angle orientation
- surface mount (SMT)
- internal switch

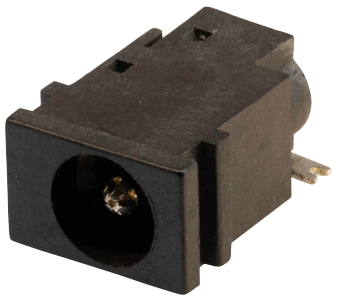

RoHS

SPECIFICATIONS

parameter	conditions/description	min	typ	max	units
rated input voltage			24		Vdc
rated input current				5	A
contact resistance				30	mΩ
insulation resistance	at 250 Vdc	100			MΩ
voltage withstand	for 1 minute			500	Vac
insertion/withdrawal force		0.3		3	kg
operating temperature		-25		85	°C
storage temperature		-40		85	°C
life			5,000		cycles
flammability rating	UL94V-0				
RoHS	yes				

SOLDERABILITY

parameter	conditions/description	min	typ	max	units
reel storage	reel opened & unsused parts repacked within 2 hours: ≤30°C, ≤60% humidity reel unopened, 1 year shelf life: ≤30°C, ≤85% humidity				
reflow soldering	see reflow profile			260	°C
drying conditions	parts removed from reel over 6 hours: bake at 40°C for 6 hours				

Note: 1. Same Sky recommends usage of the product within 2 hours after T&R is opened. After 6 hours, Same SKy recommends drying the parts prior to use.

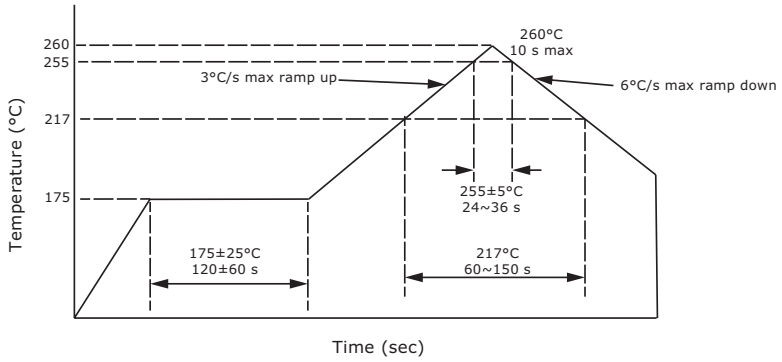

MECHANICAL DRAWING

units: mm
tolerance:
±0.2 mm
unless otherwise specified

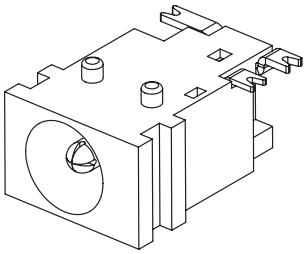

DESCRIPTION	MATERIAL	PLATING
center pin	brass	nickel
terminal 1	brass	nickel
terminal 2	bronze	silver
terminal 3	brass	silver
housing	PA9T (UL94V-0)	black

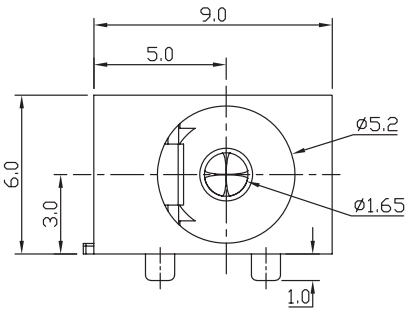

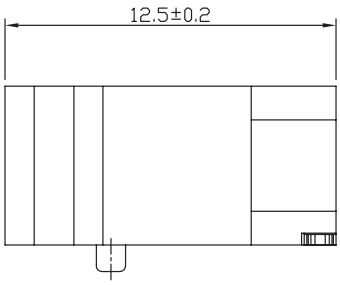

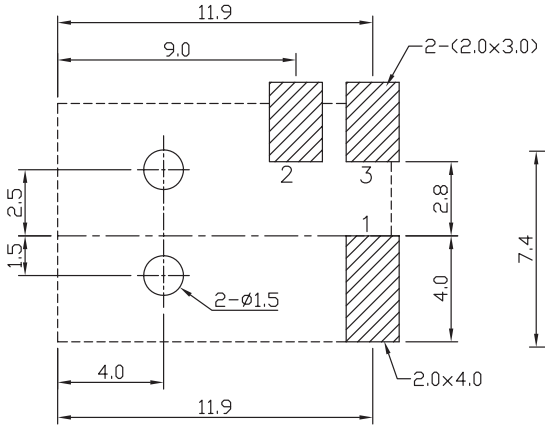

Recommended PCB Layout
Top View

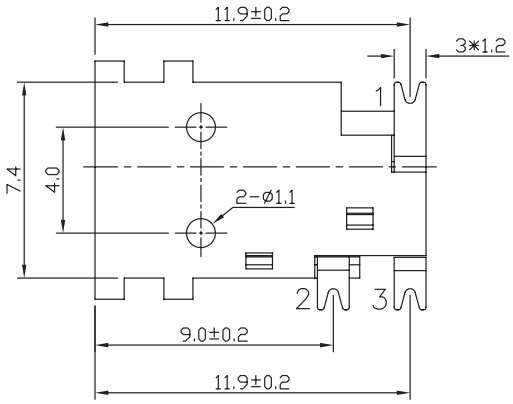

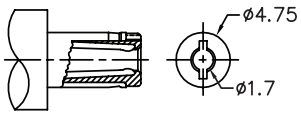

MATING PLUG
Jack Insertion Depth: 8.1 mm

SCHEMATIC	
Model	PJ1-021-SMT
Center Pin	Ø1.65 mm

PACKAGING

units: mm

Reel Size: Ø380 mm
Reel QTY: 900 pcs per reel

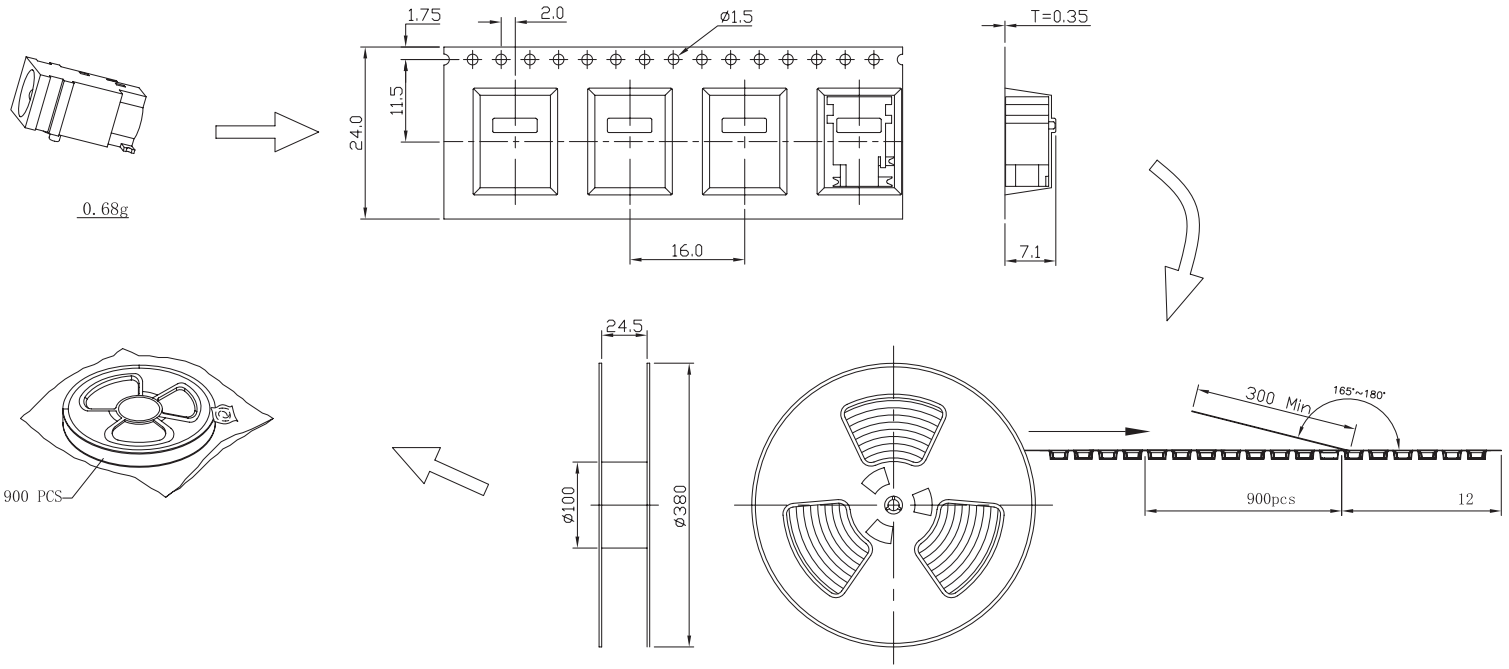

REVISION HISTORY

rev.	description	date
1.0	initial release	10/20/2005
1.01	changed housing material to PA6T from PBT	01/10/2006
1.02	added TR package option and jack insertion depth	11/07/2012
1.03	applied new spec template	08/22/2013
1.04	increased voltage rating	04/08/2016
1.05	added storage and drying conditions, and tape and reel packaging details	07/28/2017
1.06	brand update	10/25/2019
1.07	product reengineered for improved manufacturability and production yield, see PCN for details	12/08/2022
1.08	CUI Devices rebranded to Same Sky	09/12/2024

The revision history provided is for informational purposes only and is believed to be accurate.

same sky

Same Sky offers a one (1) year limited warranty. Complete warranty information is listed on our website.

Same Sky reserves the right to make changes to the product at any time without notice. Information provided by Same Sky is believed to be accurate and reliable. However, no responsibility is assumed by Same Sky for its use, nor for any infringements of patents or other rights of third parties which may result from its use.

Same Sky products are not authorized or warranted for use as critical components in equipment that requires an extremely high level of reliability. A critical component is any component of a life support device or system whose failure to perform can be reasonably expected to cause the failure of the life support device or system, or to affect its safety or effectiveness.

sameskydevices.com