MP18021

100V High Frequency Half-Bridge Gate Driver

The Future of Analog IC Technology

DESCRIPTION

The MP18021 is a high frequency, 100V half bridge N-channel power MOSFET driver. Its low side and high side driver channels are independently controlled and matched with less than 5ns in time delay. Under voltage lock-out on both high side and low side supplies force their outputs low in case of insufficient supply. The integrated bootstrap diode reduces external component count.

FEATURES

- Drives N-channel MOSFET half bridge
- 100V V_{BST} voltage range
- On-chip bootstrap diode
- Typical 16ns propagation delay time
- Less than 5ns gate drive matching
- Drive 1nF load with 12ns/9ns rise/fall times with 12V VDD
- TTL compatible input
- Less than 150μA quiescent current
- UVLO for both high side and low side
- In SOIC8 EPAD and 3×3mm QFN8 Packages

APPLICATIONS

- Telecom half bridge power supplies
- Avionics DC-DC converters
- Two-switch forward converters
- Active clamp forward converters

All MPS parts are lead-free, halogen free, and adhere to the RoHS directive. For MPS green status, please visit MPS website under Quality Assurance.
"MPS" and "The Future of Analog IC Technology" are Registered Trademarks of Monolithic Power Systems, Inc.

TYPICAL APPLICATION

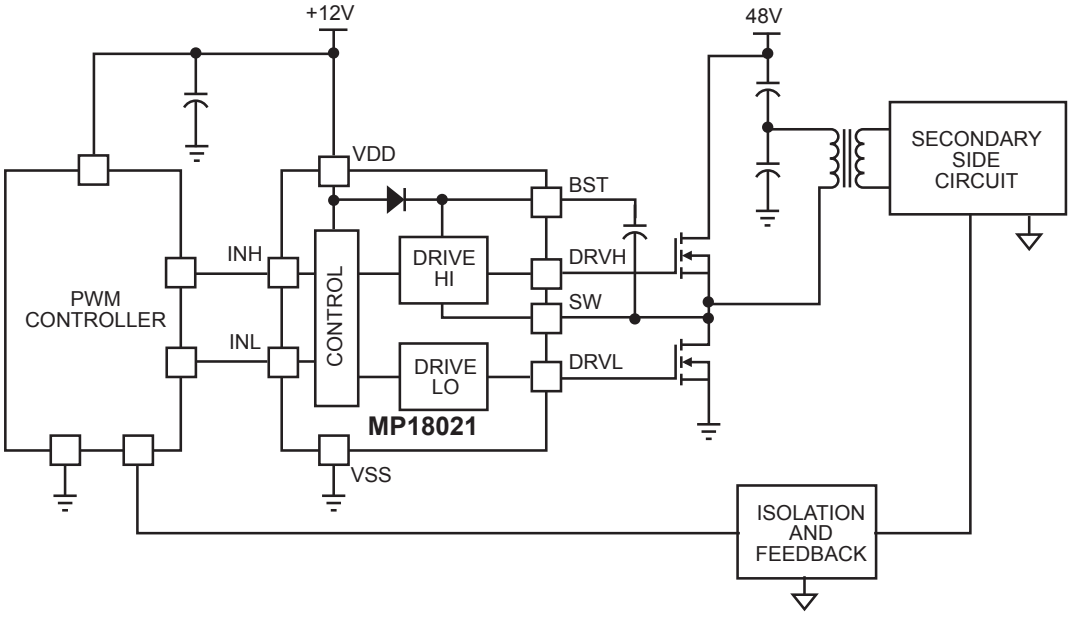

MPS Proprietary Information. Patent Protected. Unauthorized Photocopy and Duplication Prohibited.
© 2018 MPS. All Rights Reserved.

ORDERING INFORMATION

Part Number*	Package	Top Marking	Free Air Temperature (T_A)
MP18021HN	SOIC8EP	MP18021HN	-40°C to + 125°C
MP18021HQ	QFN8 (3x 3mm)	ABN	-40°C to + 125°C

* For Tape & Reel, add suffix –Z (e.g. MP18021HN–Z);
For RoHS compliant packaging, add suffix –LF; (e.g. MP18021HN–LF–Z)
For Tape & Reel, add suffix –Z (e.g. MP18021HQ–Z);
For RoHS compliant packaging, add suffix –LF; (e.g. MP18021HQ–LF–Z)

PACKAGE REFERENCE

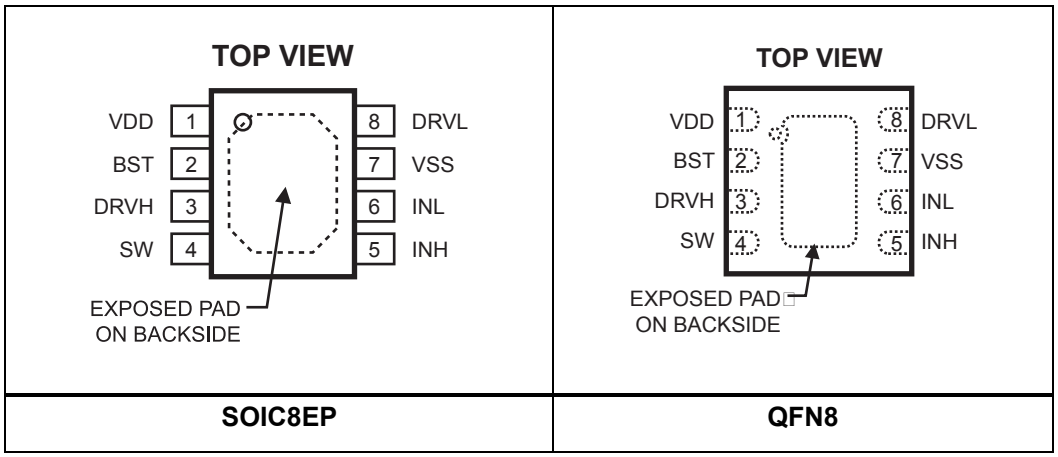

SOIC8EP	QFN8

ABSOLUTE MAXIMUM RATINGS (1)

Supply Voltage (V_{DD}).....-0.3V to +18V
SW Voltage (V_{SW}) .....-5.0V to 100V
BST Voltage (V_{BST}) .....-0.3V to 100V
BST to SW .....-0.3V to +18V
DRVH to SW.....-0.3V to +18V
All Other Pins..... -0.3V to (V_{DD}+0.3V)
Continuous Power Dissipation (T_A =+25°C)(2)
SOIC8 (Exposed Pad) 2.6W
QFN8 (3x3) 2.5W
Junction Temperature.....150°C
Lead Temperature .....260°C
Storage Temperature..... -65°C to +150°C

Recommended Operating Conditions (3)

Supply Voltage V_{DD} .....+9.0V to 16.0V
SW Voltage (V_{SW}) .....-1.0V to 100V-V_{DD}
SW slew rate.....<50V/nsec
Operating Junct. Temp (T_J)..... -40°C to +125°C

Thermal Resistance (4) θ_{JA} θ_{JC}

SOIC8 (Exposed Pad)	48	10	°C/W
QFN8 (3x3)	50	12	°C/W

Notes:
1) Exceeding these ratings may damage the device.
2) The maximum allowable power dissipation is a function of the maximum junction temperature T_J(MAX), the junction-to-ambient thermal resistance θ_{JA}, and the ambient temperature T_A. The maximum allowable continuous power dissipation at any ambient temperature is calculated by P_D(MAX)=(T_J(MAX)-T_A)/ θ_{JA}. Exceeding the maximum allowable power dissipation will cause excessive die temperature, and the regulator will go into thermal shutdown. Internal thermal shutdown circuitry protects the device from permanent damage.
3) The device is not guaranteed to function outside of its operating conditions.
4) Measured on JESD51-7, 4-layer PCB.

MPS Proprietary Information. Patent Protected. Unauthorized Photocopy and Duplication Prohibited.
© 2018 MPS. All Rights Reserved.

ELECTRICAL CHARACTERISTICS

V_{DD} = V_{BST}-V_{SW}=12V, V_{SS}=V_{SW} = 0V, No load at DRVH and DRVL, T_A= +25°C, unless otherwise noted.

Parameter	Symbol	Condition	Min	Typ	Max	Units
Supply Currents						
VDD quiescent current	I_{DDQ}	INL=INH=0		100	150	μA
VDD operating current	I_{DDO}	fsw=500kHz		2.8	3.5	mA
Floating driver quiescent current	I_{BSTQ}	INL=INH=0		60	90	μA
Floating driver operating current	I_{BSTO}	fsw=500kHz		2.1	3	mA
Leakage Current	I_{LK}	BST=SW=100V		0.05	1	μA
Inputs						
INL/INH High				2	2.4	V
INL/INH Low			1	1.4		V
INL/INH internal pull-down resistance	R_{IN}			185		kΩ
Under Voltage Protection						
VDD rising threshold	V_{DDR}		7.7	8.1	8.5	V
VDD hysteresis	V_{DDH}			0.5		V
(BST-SW) rising threshold	V_{BSTR}		6.7	7.1	7.5	V
(BST-SW) hysteresis	V_{BSTH}			0.55		V
Bootstrap Diode						
Bootstrap diode VF @ 100uA	V_{F1}			0.5		V
Bootstrap diode VF @ 100mA	V_{F2}			0.9		V
Bootstrap diode dynamic R	R_D	@ 100mA		2.5		Ω
Low Side Gate Driver						
Low level output voltage	V_{OLL}	I_O=100mA		0.15	0.22	V
High level output voltage to rail	V_{OHL}	I_O=-100mA		0.45	0.6	V
Peak pull-up current	I_{OHL}	V_{DRVL}=0V, V_{DD}=12V		1.5		A
		V_{DRVL}=0V, V_{DD}=16V		2.5		A
Peak pull-down current	I_{OLL}	V_{DRVL}=V_{DD}=12V		2.5		A
		V_{DRVL}=V_{DD}=16V		3.5		A
Floating Gate Driver						
Low level output voltage	V_{OLH}	I_O=100mA		0.15	0.22	V
High level output voltage to rail	V_{OHH}	I_O=-100mA		0.45	0.6	V
Peak pull-up current	I_{OHH}	V_{DRVH}=0V, V_{DD}=12V		1.5		A
		V_{DRVH}=0V, V_{DD}=16V		2.5		A
Peak pull-down current	I_{OLH}	V_{DRVH}=V_{DD}=12V		2.5		A
		V_{DRVH}=V_{DD}=16V		3.5		A

MPS Proprietary Information. Patent Protected. Unauthorized Photocopy and Duplication Prohibited.
© 2018 MPS. All Rights Reserved.

ELECTRICAL CHARACTERISTICS *(continued)*

V_{DD} = V_{BST}-V_{SW}=12V, V_{SS}=V_{SW} = 0V, No load at DRVH and DRVL, T_A= +25°C, unless otherwise noted.

Parameter	Symbol	Condition	Min	Typ	Max	Units
Switching Spec. --- Low Side Gate Driver						
Turn-off propagation delay INL falling to DRVL falling	T_{DLFF}			16		ns
Turn-on propagation delay INL rising to DRVL rising	T_{DLRR}			16		
DRVL rise time		C_L=1nF		12		ns
DRVL fall time		C_L=1nF		9		ns
Switching Spec. --- Floating Gate Driver						
Turn-off propagation delay INL falling to DRVH falling	T_{DHFF}			16		ns
Turn-on propagation delay INL rising to DRVH rising	T_{DHRR}			16		ns
DRVH rise time		C_L=1nF		12		ns
DRVH fall time		C_L=1nF		9		ns
Switching Spec. --- Matching						
Floating driver turn-off to low side drive turn-on	T_{MON}			1	5	ns
Low side driver turn-off to floating driver turn-on	T_{MOFF}			1	5	ns
Minimum input pulse width that changes the output	T_{PW}				50(5)	ns
Bootstrap diode turn-on or turn-off time	T_{BS}			10(5)		ns
Over Temperature Protection(5)						
OTP entry threshold				160		°C
OTP recovery threshold				140		
OTP hysteresis				20		

Note:

5) Derived from bench characterization. Not tested in production.

MPS Proprietary Information. Patent Protected. Unauthorized Photocopy and Duplication Prohibited.
© 2018 MPS. All Rights Reserved.

PIN FUNCTIONS

Pin #	Name	Description
1	VDD	Supply input. This pin supplies power to all the internal circuitry. A decoupling capacitor to ground must be placed close to this pin to ensure stable and clean supply.
2	BST	Bootstrap. This is the positive power supply for the internal floating high-side MOSFET driver. Connect a bypass capacitor between this pin and SW pin.
3	DRVH	Floating driver output.
4	SW	Switching node.
5	INH	Control signal input for the floating driver.
6	INL	Control signal input for the low side driver.
7	VSS, Exposed Pad	Chip ground. Connect to Exposed pad to VSS for proper thermal operation.
8	DRVL	Low side driver output.

MPS Proprietary Information. Patent Protected. Unauthorized Photocopy and Duplication Prohibited.
© 2018 MPS. All Rights Reserved.

TYPICAL PERFORMANCE CHARACTERISTICS

V_{DD} =12V, V_{SS}=V_{SW} = 0V, T_A= +25°C, unless otherwise noted.

I_{DDO} Operation Current vs. Frequency

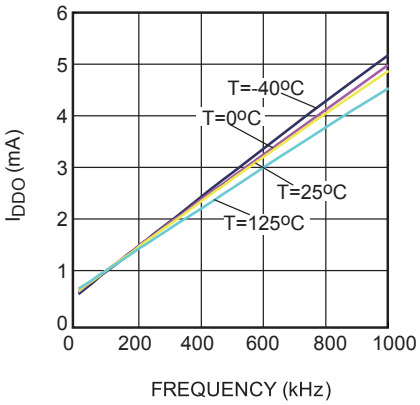

I_{BSTO} Operation Current vs. Frequency

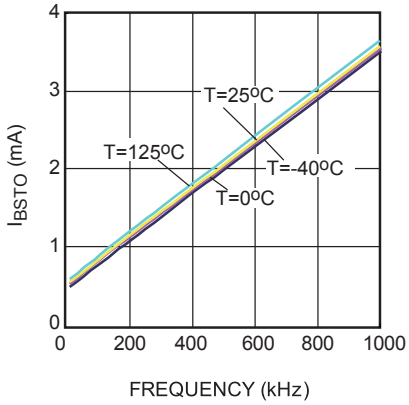

High Level Output Voltage vs.Temperature

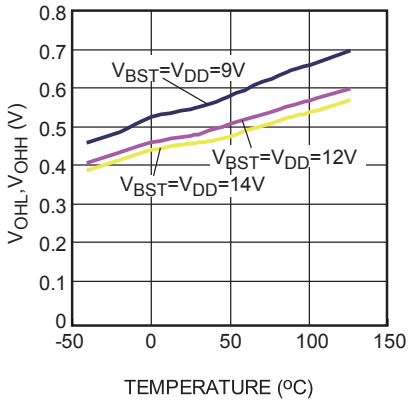

Low Level Output Voltage vs. Temperature

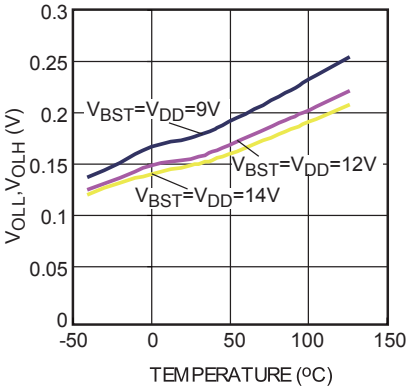

Undervoltage Lockout Threshold vs.Temperature

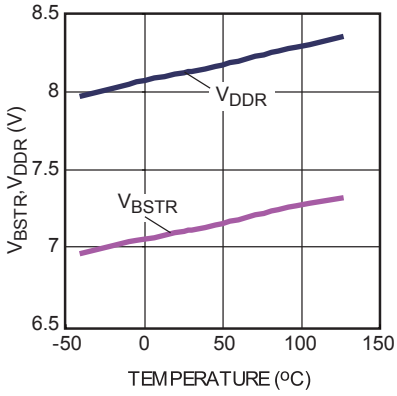

Undervoltage Lockout Hysteresis vs.Temperature

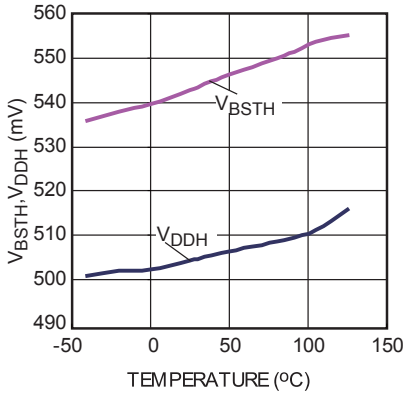

Propagation Delay vs. Temperature

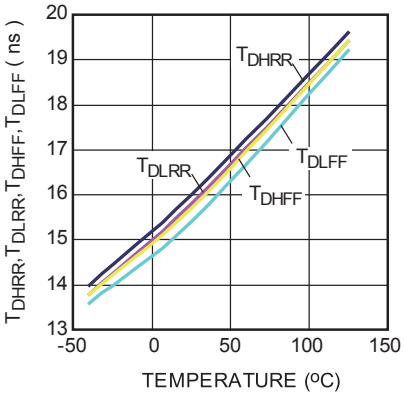

Peak Pull-up Current vs. Output Voltage

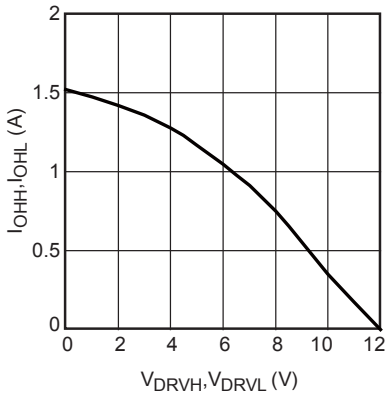

Peak Pull-down Current vs. Output Voltage

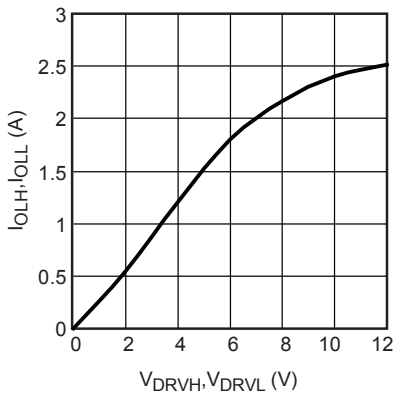

MPS Proprietary Information. Patent Protected. Unauthorized Photocopy and Duplication Prohibited.
© 2018 MPS. All Rights Reserved.

TYPICAL PERFORMANCE CHARACTERISTICS *(continued)*

V_{DD} =12V, V_{SS}=V_{SW} = 0V, T_A= +25°C, unless otherwise noted.

Bootstrap Diode I-V Characteristics

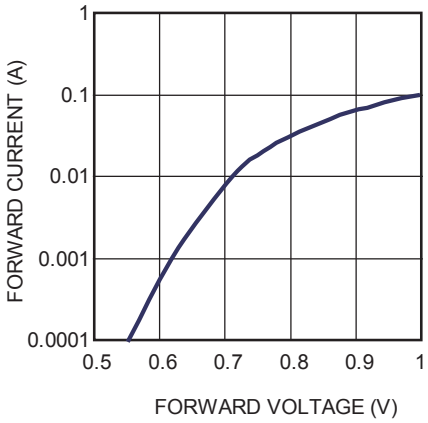

Quiescent Current vs. Voltage

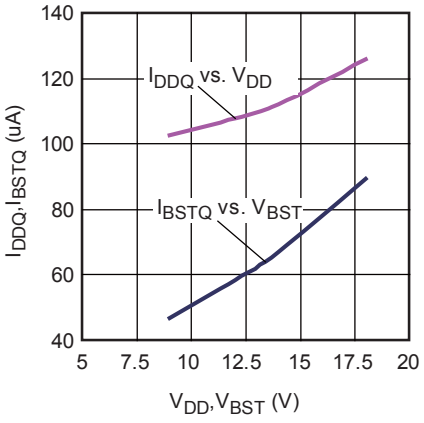

Maximum V_{SW} Voltage vs. V_{DD} Voltage

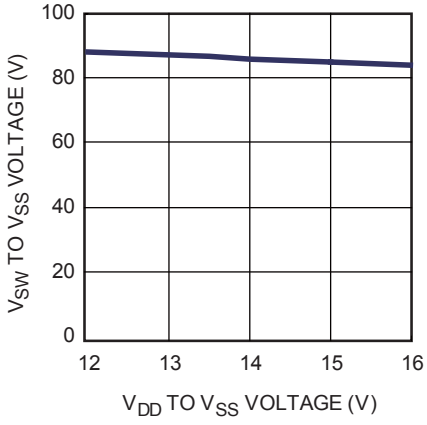

Turn-on Propagation Delay

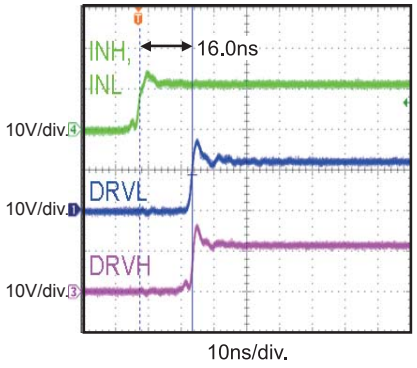

Gate Drive Matching T_{MOFF}

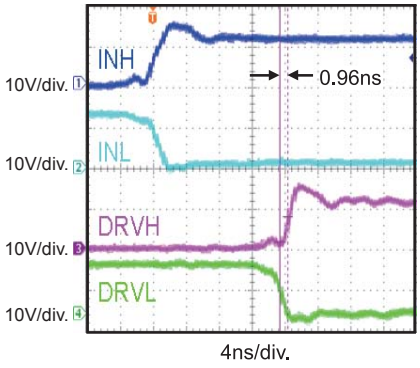

Drive Rise Time (1nF Load)

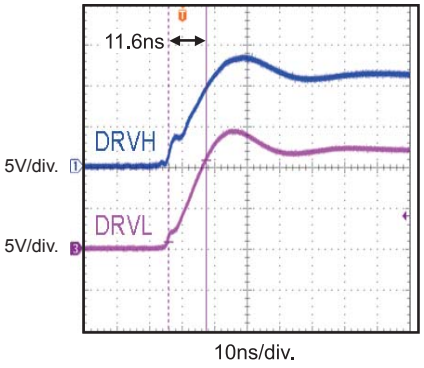

Turn-off Propagation Delay

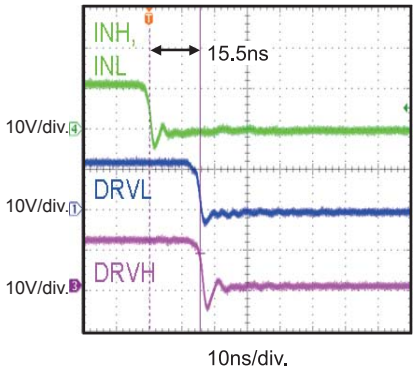

Gate Drive Matching T_{MON}

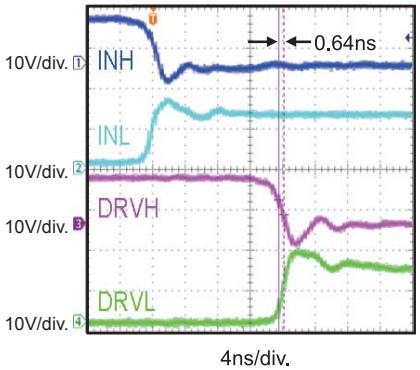

Drive Fall Time (1nF Load)

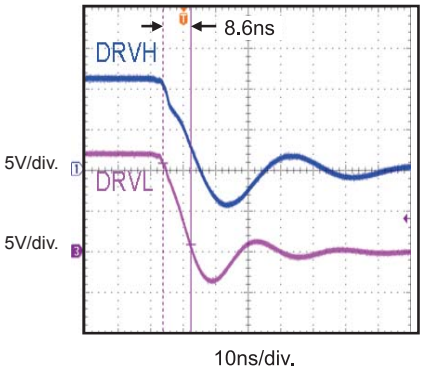

MPS Proprietary Information. Patent Protected. Unauthorized Photocopy and Duplication Prohibited.
© 2018 MPS. All Rights Reserved.

BLOCK DIAGRAM

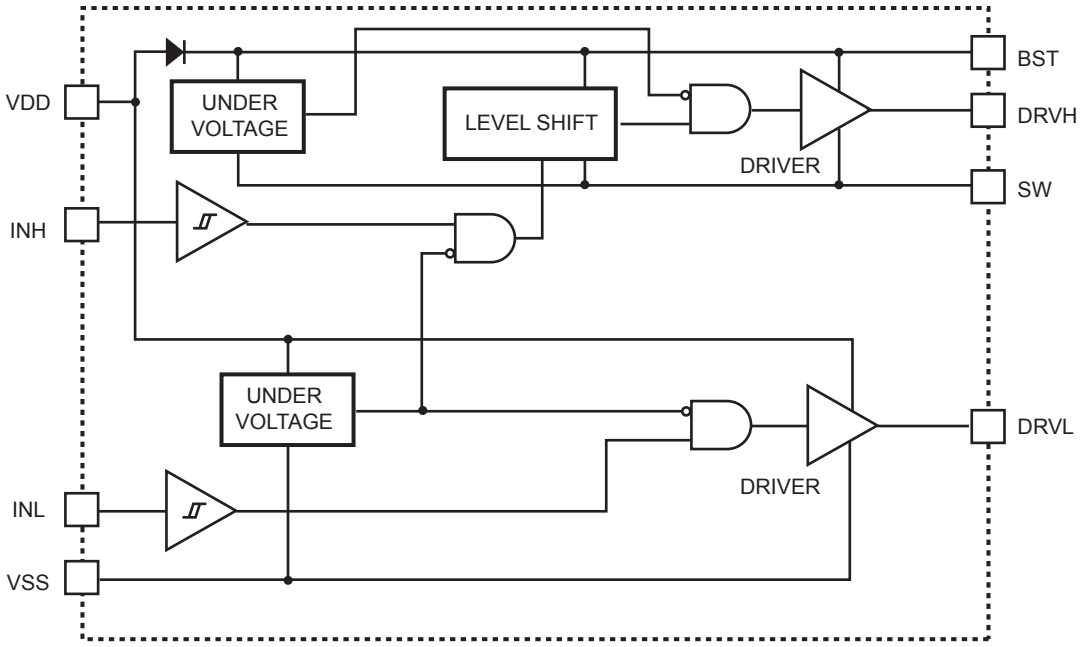

Figure 1—Function Block Diagram

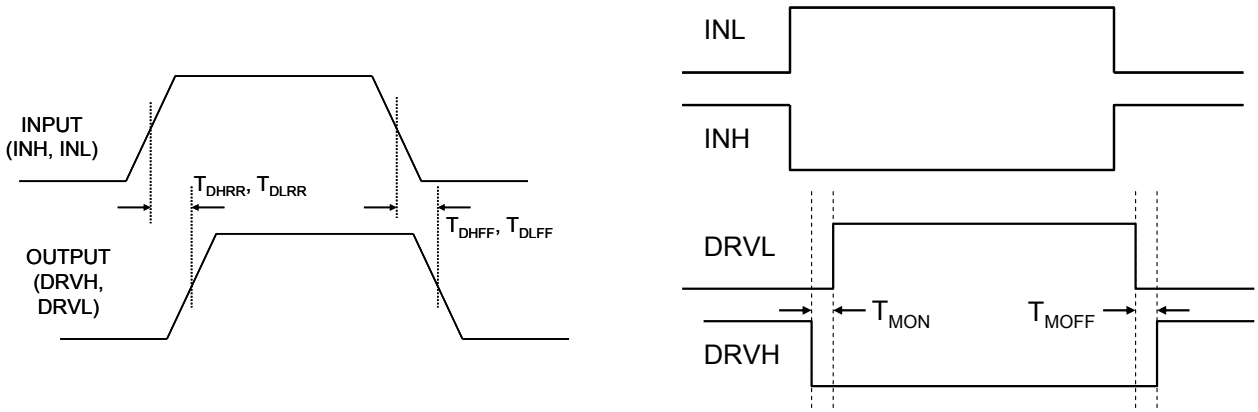

Figure 2—Timing Diagram

MPS Proprietary Information. Patent Protected. Unauthorized Photocopy and Duplication Prohibited.
© 2018 MPS. All Rights Reserved.

PACKAGE INFORMATION

SOIC8 (EXPOSED PAD)

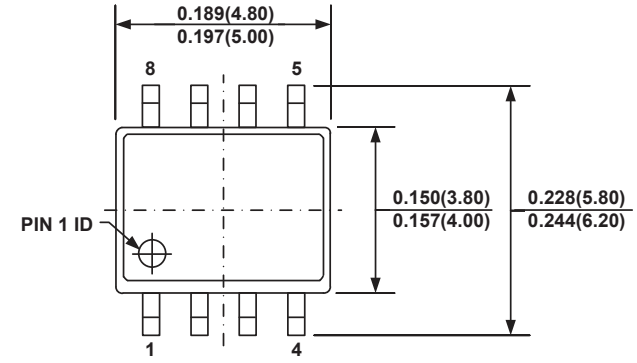

TOP VIEW

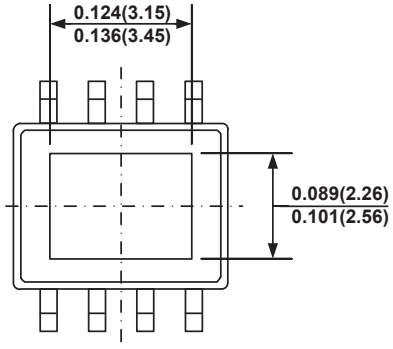

BOTTOM VIEW

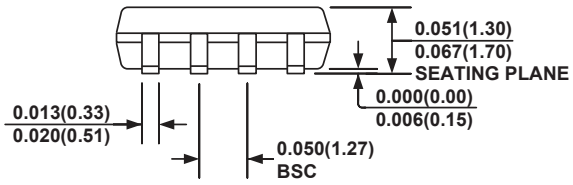

FRONT VIEW

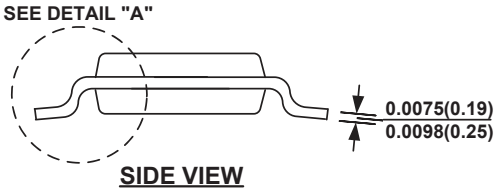

SIDE VIEW

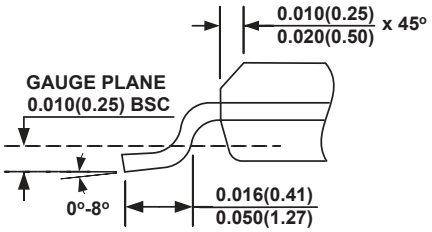

DETAIL "A"

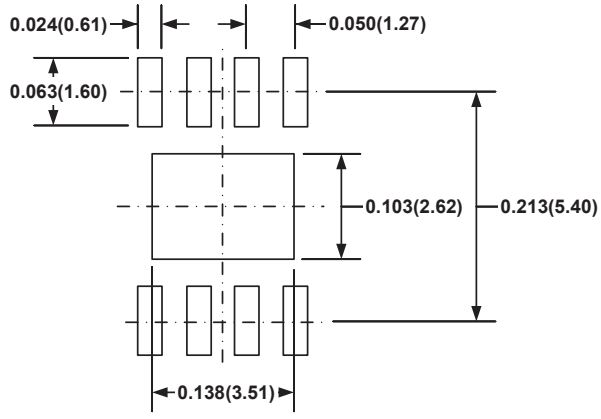

RECOMMENDED LAND PATTERN

NOTE:

1) CONTROL DIMENSION IS IN INCHES. DIMENSION IN BRACKET IS IN MILLIMETERS.
2) PACKAGE LENGTH DOES NOT INCLUDE MOLD FLASH, PROTRUSIONS OR GATE BURRS.
3) PACKAGE WIDTH DOES NOT INCLUDE INTERLEAD FLASH OR PROTRUSIONS.
4) LEAD COPLANARITY (BOTTOM OF LEADS AFTER FORMING) SHALL BE 0.004" INCHES MAX.
5) DRAWING CONFORMS TO JEDEC MS-012, VARIATION BA.
6) DRAWING IS NOT TO SCALE.

MPS Proprietary Information. Patent Protected. Unauthorized Photocopy and Duplication Prohibited.
© 2018 MPS. All Rights Reserved.

QFN8 (3mm×3mm)

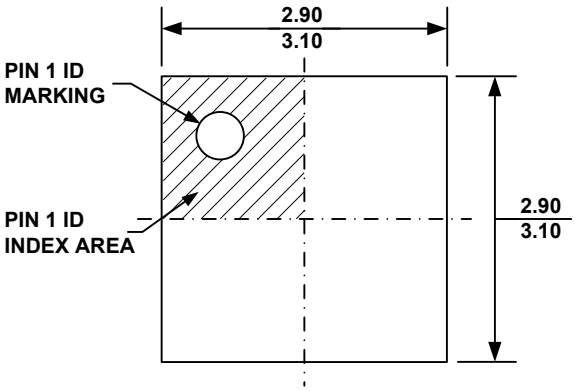

TOP VIEW

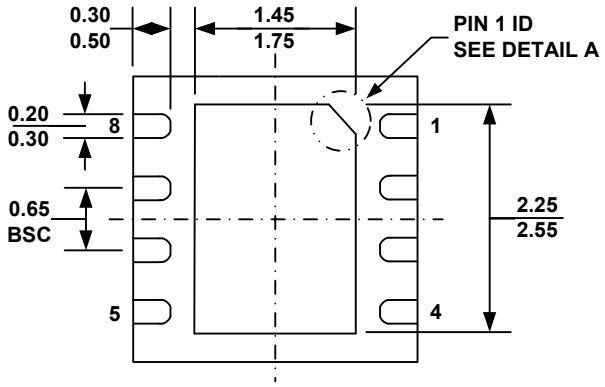

BOTTOM VIEW

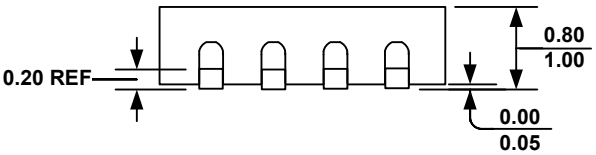

SIDE VIEW

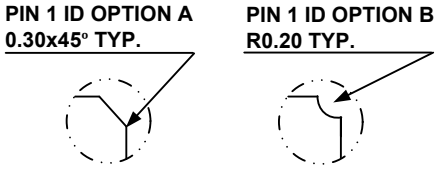

DETAIL A

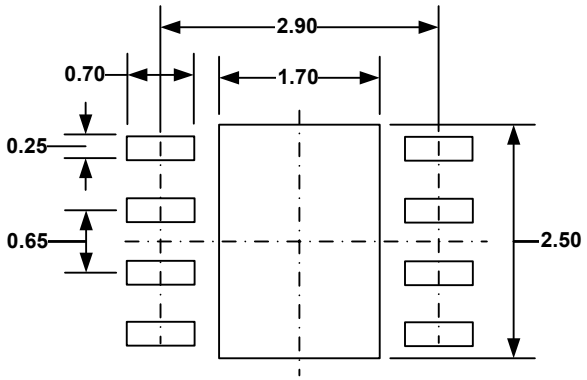

RECOMMENDED LAND PATTERN

NOTE:

1) ALL DIMENSIONS ARE IN MILLIMETERS.
2) EXPOSED PADDLE SIZE DOES NOT INCLUDE MOLD FLASH.
3) LEAD COPLANARITY SHALL BE 0.10 MILLIMETER MAX.
4) DRAWING CONFORMS TO JEDEC MO-229, VARIATION VEEC-2.
5) DRAWING IS NOT TO SCALE.

NOTICE: The information in this document is subject to change without notice. Users should warrant and guarantee that third party Intellectual Property rights are not infringed upon when integrating MPS products into any application. MPS will not assume any legal responsibility for any said applications.

MPS Proprietary Information. Patent Protected. Unauthorized Photocopy and Duplication Prohibited.
© 2018 MPS. All Rights Reserved.