µP Controlled Battery Charger for 1-Cell Li-ion or 1-Cell to 3-Cell NiCd/NiMH Batteries

DESCRIPTION

Si9731 is a chemistry independent battery charger designed to pulse charge 1-cell to 3-cell NiCd/NiMH or 1-cell Li-ion batteries. Battery charging is accomplished under direct control from the system processor. An internal low $R_{DS(on)}$ MOSFET can be pulsed on and off at varying duty cycle by the system processor to pulse charge the battery at high charge current while minimizing heat dissipation. Provision is also made to trickle charge a discharged battery until the battery is charged to a high enough voltage to wake up the processor so that the processor can take control of the charging process. For charging Li-ion batteries, Si9731 includes a precision voltage reference and an error amplifier for constant voltage (CV) charge mode. The Si9731 is available in lead (Pb)-free TSSOP-16 package and is classified over the industrial temperature range (- 40 °C to + 85 °C).

FEATURES

Pb-free

RoHS COMPLIANT

HALOGEN FREE

- Pulse charges 1-cell Li-ion or 1-cell to 3-cell NiCd/NiMH batteries
- Integrated MOSFETs with bi-directional reverse current blocking in "OFF" mode
- PWM controlled fast charging mode
- Low current trickle charge mode
- Pin selectable 4.1 V or 4.2 V charge termination for Li-ion
- Constant voltage (CV) termination for Li-ion
- Input over-voltage detector with automatic shutdown
- External shutdown
- Under 1 µA reverse battery leakage current in shutdown
- Complete isolation from battery to external power supply in shutdown
- Thermal shutdown
- Minimum number of external components
- ESD protection to 4 kV on charger input and battery output
- TSSOP-16 package (1.2 mm maximum height)
- **Halogen-free according to IEC 61249-2-21 definition**
- **Compliant to RoHS directive 2002/95/EC**

APPLICATIONS

- Cellular phone battery charger
- Personal digital assistants

FUNCTIONAL BLOCK DIAGRAM

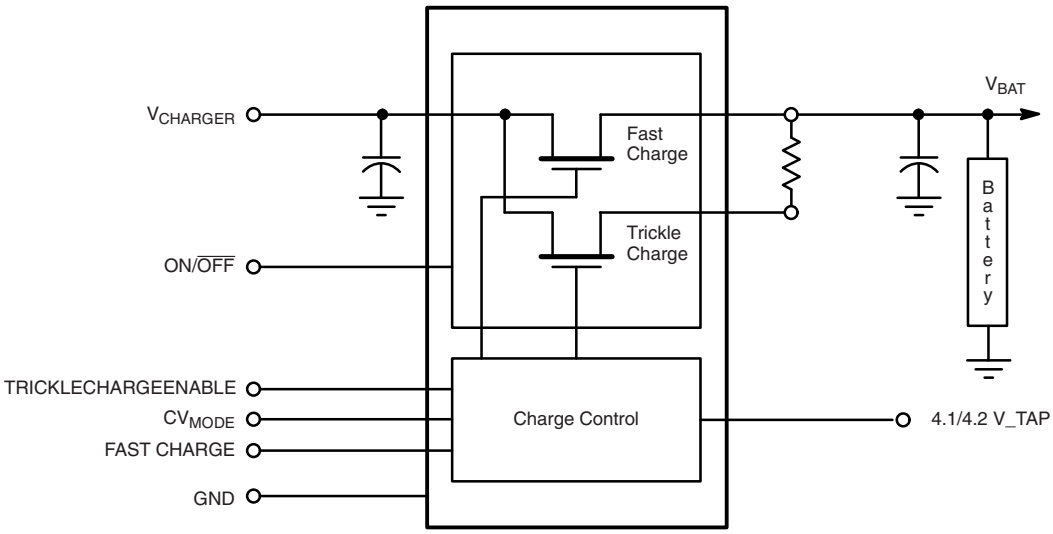

ABSOLUTE MAXIMUM RATINGS

Parameter		Symbol	Limit	Unit
Voltages Referenced to GND = 0 V				
$V_{CHARGER}$, $V_{(CVMODE)}$, $V_{(TRICKLECHARGEEN)}$, $V_{(MAINCHARGEREN)}$, $V_{(ON/OFF)}$, $V_{(4.1\ V_TAP)}$, $V_{(VBAT+)}$, $V_{\overline{(CHARGERPOWER_ON)}}$, $V_{\overline{(CHARGERPRESENT)}}$, $V_{(TRICKLE_VBAT)}$				
$V_{(CHARGERPRESENTIN)}$, $V_{(CHARGERPOWER_ONIN)}$			- 0.3 to 13.5	V
Maximum Input Current ($I_{CHARGER(max)}$)			1.2	A
Maximum Sink Current $\overline{CHARGERPOWER_ON}$ and $\overline{CHARGERPRESENT}$ Pins			5	mA
Storage Temperature			- 65 to 150	°C
Operating Junction Temperature			150	
Power Dissipation (Package)[a]	16-Pin TSSOP (Q Suffix)[b]		1.06	W
Thermal Impedance (Θ_{JA})	16-Pin TSSOP		135	°C/W

Notes:
a. Device Mounted with all leads soldered or welded to PC board.
b. Derate 10 mW/°C above 25 °C.

Stresses beyond those listed under "Absolute Maximum Ratings" may cause permanent damage to the device. These are stress ratings only, and functional operation of the device at these or any other conditions beyond those indicated in the operational sections of the specifications is not implied. Exposure to absolute maximum rating conditions for extended periods may affect device reliability.

RECOMMENDED OPERATING RANGE

Parameter	Symbol	Limit	Unit
Voltages Referenced to GND = 0 V			
$V_{CHARGER}$		3.0 to 12	V
Ambient Temperature		- 40 to + 85	°C
V_{REF}Bypass Capacitor		0.1	µF
C_{OUT}		2.2	
C_{IN}		2.2	

See application drawing Figure 1.

SPECIFICATIONS

Parameter	Symbol	Test Conditions Unless Specified - 40 °C < T_A < + 85 °C 3.0 V ≤ $V_{CHARGER}$ ≤ 6.5 V, $V_{ON/\overline{OFF}}$ = 1.5 V		Min.[a]	Typ.[b]	Max.[a]	Unit
External Charger Voltage	$V_{CHARGER}$			3.0		12	V
Under Voltage Lockout on Charger	V_{UVLO}	Rising Edge of Battery Charger		2.45	2.6	2.75	
UVLO Hysteresis	$UVLO_{HYST}$			70	90	110	mV
Regulated Output Voltage 4.1 V_TAP to V_{BAT}	V_{TERM+}	$V_{CHARGER}$ = 5.0 V I_{BAT+} = 1 mA MAINCHARGEREN = 5.0 V CVMODE = 5.0 V	- 10 °C < T_A < + 40 °C	4.050	4.1	4.150	V
			- 40 °C < T_A < + 85 °C	4.025	4.1	4.150	
Regulated Output Voltage 4.1 V_TAP Open			- 10 °C < T_A < + 40 °C	4.150	4.2	4.250	
			- 40 °C < T_A < + 85 °C	4.125	4.2	4.250	
Battery Over Voltage Protection	V_{OVP}	Rising Edge of V_{BAT+}		4.70	4.95	5.15	
Battery Over Voltage Hysteresis	V_{OVP_HYS}				0.11		
Battery Minimum Operating Voltage	$V_{BAT(min)}$	Rising Edge, V_{BAT+} Latch		3.12	3.24	3.33	
Charger Voltage to Battery Voltage Comparator Offset	V_{OS_CB}	Comparator Offset Voltage, $V_{CHARGER}$ - V_{BAT+}	MAINCHARGEEN-High	- 0.08	- 0.04	- 0.01	
			MAINCHARGEEN-Low	0.01	0.04	0.08	
Charger Voltage to Battery Voltage Comparator Hysteresis					0.07		

SPECIFICATIONS

Parameter		Symbol	Test Conditions Unless Specified - 40 °C < T_A < + 85 °C 3.0 V ≤ $V_{CHARGER}$ ≤ 6.5 V, $V_{ON/\overline{OFF}}$ = 1.5 V		Min.[a]	Typ.[b]	Max.[a]	Unit
Quiescent Current (Normal Mode)		$I_{IN(VCHARGER\ Pin)}$ ON-Mode	1 mA ≤ I_{BAT+} ≤ 600 mA			1	3	mA
Quiescent Current (Shutdown Mode)		$I_{IN(VCHARGER\ Pin)}$ OFF-Mode	$V_{ON/\overline{OFF}}$ = 0 V, $V_{CHARGER}$ = 4.5 V			0.1	1	µA
Feedback Resistor		R_{FB1}	Pin 12 to Pin 14			1		kΩ
		R_{FB2} + R_{FB3}	Pin 12 to GND			41		
Battery Leakage Current		I_{PIN13} + I_{PIN14}	V_{BAT+} = 4.2 V	$V_{ON/\overline{OFF}}$ = 0 V	- 1	0.1	1	µA
				$V_{CHARGER}$ = 0 V	- 1	0.1	2	
Q1 ON Resistance		Q1 $R_{DS(on)}$	$V_{CHARGER}$ = 4.5 V	MAINCHARGEREN ≥ 1.5 V			400	mΩ
Q2 ON Resistance		Q2 $R_{DS(on)}$		$\overline{TRICKLECHARGEEN}$ ≤ 0.4 V		6	10	Ω
Q5 ON Resistance[c]		Q5 $R_{DS(on)}$		CVMODE ≥ 1.5 V		6		
Over Voltage Detect Threshold		$V_{CHARGER(OVD)}$	Rising Edge of Battery Charger		12.0	12.8	13.4	V
Over Voltage Detect Threshold Hysteresis		$V_{CHARGER(OVD)_HYS}$				0.4		
$\overline{CHARGERPRESENT}$ and $\overline{CHARGERPOWER_ON}$	Output High Leakage Current	I_{OH}	V_{OH} = 6.5 V			0.1	2	µA
	Output Low Voltage	V_{OL}	I_{OL} = 1 mA				0.4	V
CHARGERPRESENTIN, CHARGERPOWER_ONIN, $\overline{TRICKLECHARGEEN}$, MAINCHARGEEN or CVMODE	Logic Low Voltage	V_{IL}					0.4	
	Logic High Voltage	V_{IH}			1.5			
	Pull Down Current	$I_{P/D}$				0.7	10	µA
Thermal Shutdown Temperature[c]		$T_{S/D}$				130		°C
Thermal Shutdown Hysteresis[c]		T_{HYST}				10		
Shutdown High Voltage Logic Level		$V_{ON/\overline{OFF}(high)}$			1.5			V
Shutdown Low Voltage Logic Level		$V_{ON/\overline{OFF}(low)}$					0.3	
Shutdown Hysteresis		$V_{ON/\overline{OFF}(hyst)}$				100		mV

Notes:
a. The algebraic convention whereby the most negative value is a minimum and the most positive a maximum, is used in this data sheet.
b. Typical values are for DESIGN AID ONLY, not guaranteed or subject to production testing.
c. Guaranteed by design and characterization, not subject to production testing.

PIN CONFIGURATION

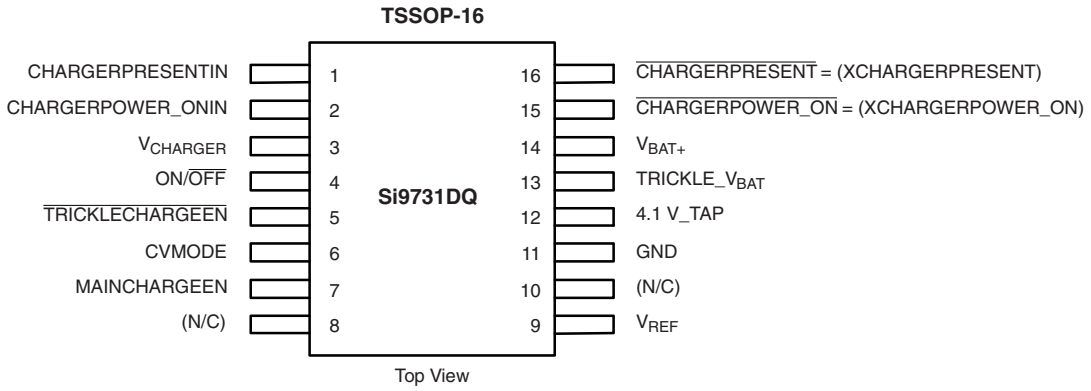

ORDERING INFORMATION		
Part Number	**Temperature Range**	**Package**
Si9731DQ-T1-E3	- 40 to 85 °C	Tape and Reel

PIN DESCRIPTION		
Pin Number	**Name**	**Function**
1	CHARGERPRESENTIN	Logic input for $\overline{\text{CHARGERPRESENT}}$ output
2	CHARGERPOWER_ONIN	Logic input for $\overline{\text{CHARGERPOWER_ON}}$ output
3	$V_{CHARGER}$	External charger
4	ON/$\overline{\text{OFF}}$	Master shutdown pin. Taking ON/$\overline{\text{OFF}}$ low shuts down the charger and quiescent current drops to under 1 µA
5	$\overline{\text{TRICKLECHARGEEN}}$	Taking this pin high disables trickle (slow) charging
6	CVMODE	A logic high enables the error amplifier to linearly drive the gate of MOSFET Q1 when MAINCHARGEREN is high.
7	MAINCHARGEEN	An external PWM signal at MAINCHARGEREN pin controls the ON/OFF duty cycle of the Fast Charge MOSFET, Q1.
8, 10	N/C	Do not connect external circuitry to this pin. Circuitry internal to the IC is connected to this pin.
9	V_{REF}	Internal 1.30 V precision bandgap reference voltage. Do not apply loads to this pin.
11	GND	Low impedance system ground
12	4.1 V_TAP	Connect this pin to V_{BAT+} for 4.1 V charge termination in constant voltage mode
13	TRICKLE_V_{BAT}	Resistor connected between this pin and V_{BAT} to limit the trickle charge current.
14	V_{BAT+}	Charger output connected to battery's positive terminal
15	$\overline{\text{CHARGERPOWER_ON}}$	Open drain logic output
16	$\overline{\text{CHARGERPRESENT}}$	Open drain logic output

TABLE 1: BATTERY CHARGING CONTROL LOGIC Nominal Voltage Values							
$V_{CHARGER}$	$\overline{\text{TRICKLE}}$ $\overline{\text{CHARGEEN}}$	CVMODE	MAIN CHARGEEN	ON/$\overline{\text{OFF}}$	Q1[b]	Q2	Mode
Not Present	X	X	X	X	OFF	OFF	Not Charging
Not Present OK to Charge[a]	X	X	X	X	OFF	OFF	Not Charging
Over Voltage $V_{CHARGER}$ > 12.8 V	X	X	X	X	OFF	OFF	Not Charging
Present OK to Charge[a]	X	X	X	LOW	OFF	OFF	Not Charging (Shutdown)
	LOW	LOW	LOW	HIGH	OFF	ON	Trickle Charge
	HIGH	LOW	LOW	HIGH	OFF	OFF	Not Charging (Current pulse off during Constant Current Charge)
	LOW	LOW	HIGH	HIGH	ON	OFF	Constant Current Charge (current pulse on)
	HIGH	LOW	HIGH	HIGH	ON	OFF	
	LOW	HIGH	LOW	HIGH	OFF	OFF	Not Charging (Current pulse off during Constant Current Charge with output limited to 4.1 V/4.2 V or end of charge in Li-Ion charging)
	HIGH	HIGH	LOW	HIGH	OFF	OFF	
	LOW	HIGH	HIGH	HIGH	ON	OFF	Constant Current Charge (Output Limited to 4.1 V/4.2 V or Constant Voltage Charge)
	HIGH	HIGH	HIGH	HIGH	ON	OFF	

Notes:

a. "OK to Charge" is a flag signal that is enabled by satisfying all the following conditions:

1. Battery voltage is below 5 V
2. Charger voltage is greater than 3 V but below 12.8 V
3. If MAINCHARGEEN = Logic Low, $V_{CHARGER} > V_{BAT}$ + 40 mV,
   If MAINCHARGEEN = Logic High, $V_{CHARGER} > V_{BAT}$ - 40 mV
4. ON/$\overline{\text{OFF}}$ pin is at logic high.

b. Q1 drive is determined by the error amplifier during constant voltage mode.

Q1 drive is a combination of Q1 drive (digital) and the output of the error amplifier using the analog adder. The combinations are:

TABLE 2		
Q1 Drive (Digital)	**Output of Error Amplifier**	**Q1 Drive**
LOW	LOW	LOW (fully off)
LOW	Intermediate	Intermediate (linear mode)
HIGH	LOW	HIGH (fully on)
HIGH	HIGH	Should Never Happen

TYPICAL CHARACTERISTICS 25 °C, unless otherwise noted

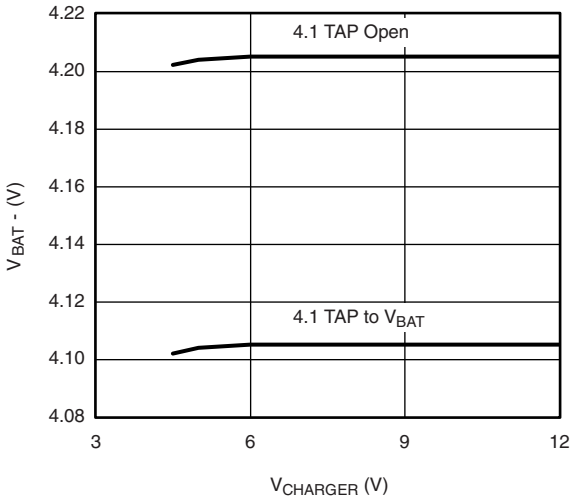

V_{BAT} (CV Mode) vs. $V_{CHARGER}$

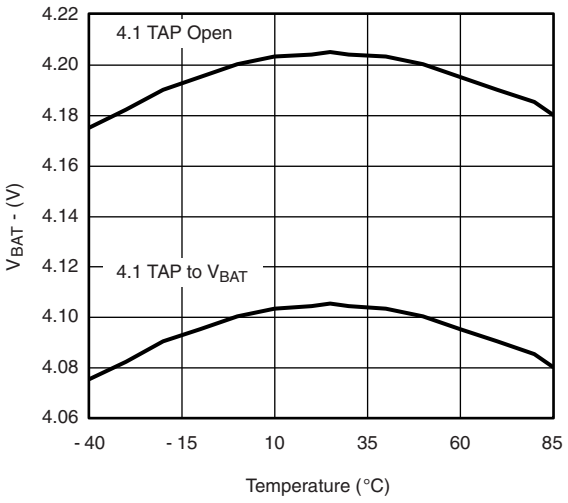

V_{BAT} (CV Mode) vs. Temperature

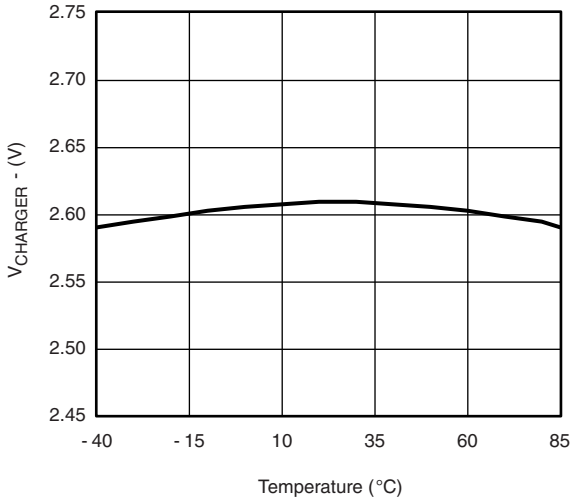

Charger UVLO Rising vs. Temperature

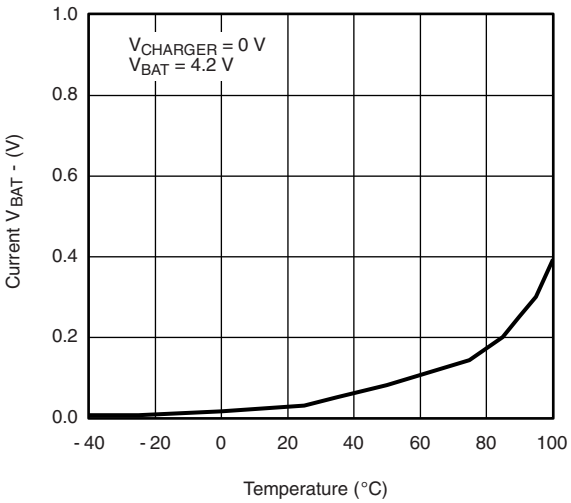

V_{BAT} Leakage vs. Temperature

BLOCK DIAGRAM AND TYPICAL APPLICATION CIRCUIT

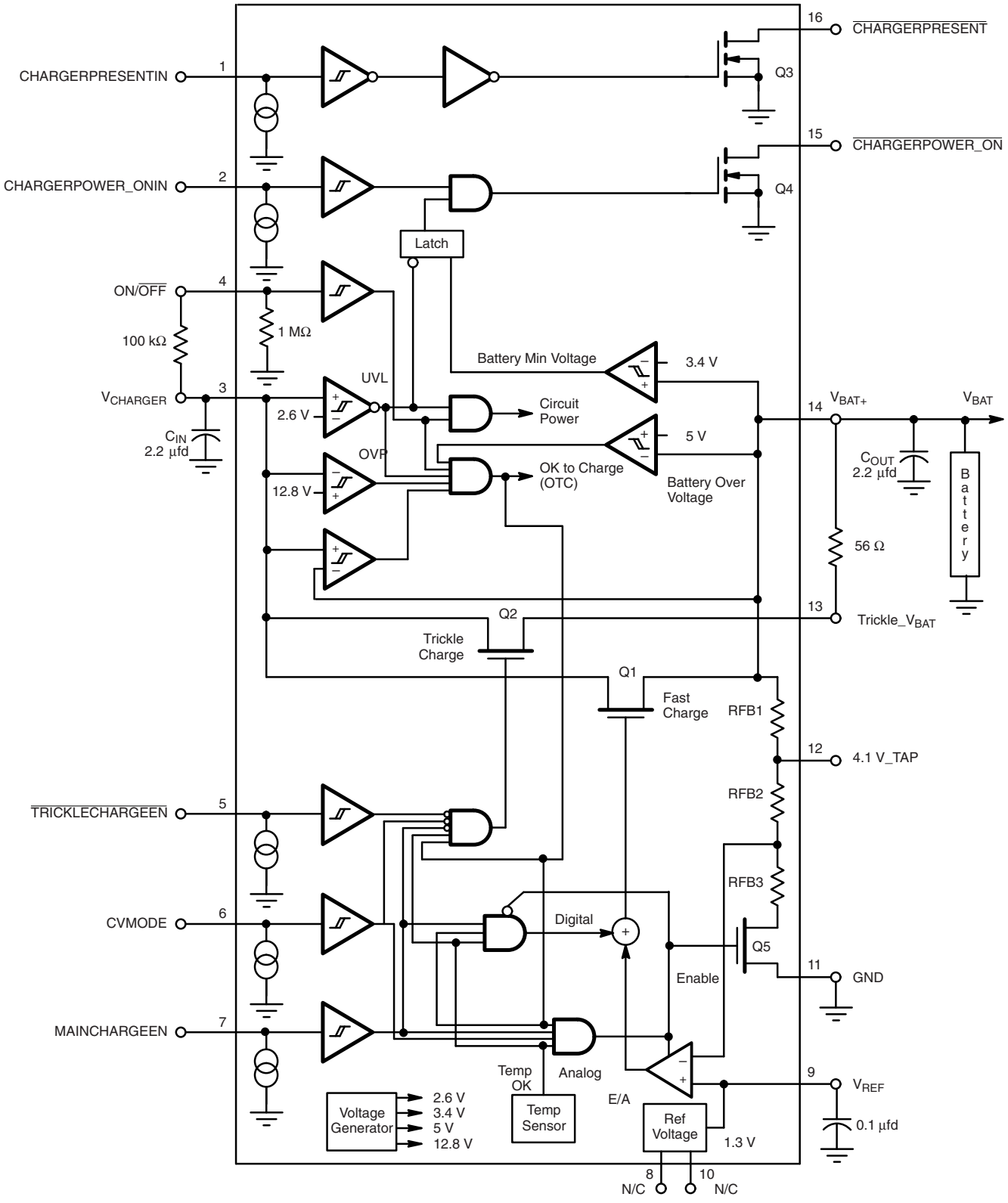

Figure 1.

DETAIL OPERATIONAL DESCRIPTION

Si9731 is a chemistry independent battery charger designed for use with a system processor. For example, Si9731 can be integrated within a cellular phone whereby the fast charge and trickle (slow) charge modes can be software controlled by the DSP. The device is designed to charge 1-cell Li-ion or 1-cell to 3-cell NiCd/NiMH batteries. A regulated or unregulated external dc power source such as a wall adapter rated at typically 4.5 V to 12 V is connected to Si9731's $V_{CHARGER}$ input pin. Note that a typical low cost wall adaptor is comprised of a transformer, bridge rectifier and a reservoir capacitor. The wall adaptor's output voltage decreases linearly with increase in output current. When Si9731 is fast charging the battery, the wall adaptor's output voltage tracks the battery voltage plus the voltage drop across Q1 (charging current times MOSFET Q1's $R_{DS(on)}$, see Figure 1). The key features of Si9731 are described below.

Since the under voltage lock out (UVLO) point of Si9731 is 2.6 V (typical), it is essential to keep the charger voltage above this level under all conditions, especially for fast charging of single cell NiCd/NiMH. One simple solution is adding a external resistor between V_{BAT+} pin and the battery, which creates extra voltage drop to elevate the charger voltage. The value of the resistor is affected by the output V-I characteristic of the ac charger.

Trickle Charge

The charge path is via N-Channel MOSFETs Q1 or Q2 (see applications circuit of Figure 1). Si9731 defaults to trickle (slow) charge mode if the battery voltage is too low to power the main processor. With the main processor unable to drive the MAINCHARGEEN pin as well as the $\overline{\text{TRICKLECHARGEEN}}$ pins, Q1 is turned "OFF" preventing fast charging. Meanwhile N-Channel MOSFET Q2 turns "ON" and establishes a trickle charge path from the external power source $V_{CHARGER}$ to the battery. The trickle charge current is set by an external current limiting resistor, R_{ext}, and is approximately $I_{TRICKLE} = (V_{CHARGER} - V_{BAT+})/R_{ext}$. Once the battery voltage charges up to minimum battery operating voltage 3.24 V, the internal latch is triggered and the $\overline{\text{CHARGERPOWER_ON}}$ output changes state to wake up the processor. The processor is now able to disable trickle charge mode by taking the $\overline{\text{TRICKLECHARGEEN}}$ pin high while taking control of fast charging via the MAINCHARGEEN pin.

Fast Charge

Fast charging is accomplished by the low "ON" resistance MOSFET, Q1. The application microprocessor is able to "Pulse Charge" the battery via the MAINCHARGEREN control input of Si9731. The processor monitors the battery voltage via the system A/D converter and varies the pulse charging duty cycle accordingly to maintain fast charging. Note that even though charging current may be sufficiently high, pulse charging with short "ON" time and long "OFF" time ensures that heat generation due to thermal heating is reduced.

In the case of NiCd or NiMH batteries, one of several charge termination schemes may be used to terminate charge. For example, the processor may disable fast charging by sensing ΔV or dV/dt at the V_{BAT+} output or by monitoring the temperature differential ΔT of the battery. Following fast charge, trickle charge may be enabled to "top off" the battery.

When charging a 1-cell Li-ion battery, fast charging will operate in two modes, constant current mode followed by constant voltage mode. In the constant current mode, a discharged Li-ion battery is charged with constant current available from the external dc source. The MOSFET pass transistor (Q1) may be pulsed "ON" and "OFF" at varying duty cycle by the control signal present at the MAINCHARGEEN input pin. Once the battery voltage reaches it's termination voltage of 4.1 V or 4.2 V (depending on the connection of the 4.1 V_{TAP}), Si9731 may be placed in the "Constant Voltage" charging mode by taking the CVMODE pin high. Taking CVMODE pin high disables trickle charging and enables the internal battery voltage divider by turning ON Q5. Then the error amplifier will compare divided V_{BAT+} voltage against an internal precision 1.3 V bandgap reference voltage (see Figure 1). The output of the error amplifier drives the pass transistor Q1 to maintain V_{BAT+} at the regulated termination voltage. This operation is same as a linear regulator.

True Load Disconnect

Both the fast charge FET (Q1 in Figure 1) and trickle charge FET (Q2 in Figure 1) incorporate a floating body diode. In their "OFF" state both FETs block current bidirectionally. Note that because of the reverse blocking switches, a Schottky diode in series with the external $V_{CHARGER}$ power supply is not required.

DETAIL OPERATIONAL DESCRIPTION

4.1 V_{TAP}

The Si9731's internal feedback resistors are set to provide 4.2 V charge termination at V_{BAT+} output if the 4.1 V_{TAP} is left open circuit. Connecting the 4.1 V_{TAP} to V_{BAT+} configures Si9731 for 4.1 V charge termination at V_{BAT+}. This feature allows Si9731 to accommodate Li-ion batteries requiring 4.1 V or 4.2 V charge termination. Caution: the 4.1 V_{TAP} should not be connected to ground or any other voltage source as this will cause the Si9731 to operate open loop and can result in over charging the battery!

Feedback Disconnect Switch

The Si9731 includes a feedback disconnect switch (Q5 in Figure 1) connected in series with the device's internal feedback resistor string. The 42 kΩ feedback resistor string is connected to ground when both the internal "OK to Charge" signal and the CVMODE pin are at logic high, providing feedback voltage to Si9731's error amplifier. This action helps prevent the Si9731 from discharging the battery.

$\overline{\text{CHARGERPRESENT}}$ and $\overline{\text{CHARGERPOWERON}}$

$\overline{\text{CHARGERPRESENT}}$ and $\overline{\text{CHARGERPOWERON}}$ are open drain outputs, each requiring an external pull-up resistor. $\overline{\text{CHARGERPRESENT}}$ pin goes low with CHARGERPRESENTIN pin goes high, signaling the processor that a charger has been inserted. $\overline{\text{CHARGERPOWERON}}$ Pin goes low when CHARGERPOWERONIN Pin is high, charger voltage is not in UVLO and the battery voltage has increased to above 3.24 V, turning on the system power supply since the battery has been charged up to minimum operating voltage.

Input Over-Voltage Detector

The external dc source connected to the $V_{CHARGER}$ pin should be at 12 V or less. In the unlikely event that the voltage at $V_{CHARGER}$ pin is at or above 12.8 V (typical), Si9731's internal over voltage detector will turn off MOSFETs Q1, Q2, and Q5 and disable charging.

Thermal Shutdown

Si9731 also includes a thermal protection circuit that suspends charging through Q1 and Q2 when die temperature exceeds 130 °C due to overheating. Once the die temperature cools to below 120 °C, the charging will resume.

Shutdown

Si9731 can be completely turned off by applying 0.4 V or less to the device's ON/$\overline{\text{OFF}}$ pin. In shutdown mode, Si9731 draws less than 1 µA quiescent current with charger voltage below UVLO, and draws 500 µA when charger voltage is above UVLO. The device is enabled by applying 1.5 V to 12 V at the ON/$\overline{\text{OFF}}$ pin. In applications where the device will always remain enabled, the ON/$\overline{\text{OFF}}$ pin may be connected to the $V_{CHARGER}$ pin. Si9731's shutdown circuitry includes hysteresis, as such the device will operate properly even if a slow moving signal is applied to the ON/$\overline{\text{OFF}}$ pin. When the device is enabled, the battery voltage sense circuitry draws approximately 25 µA from V_{BAT}.

OK to Charge (OTC)

Si9731 also includes an internal signal that enables both trickle charge mode and fast charge mode operations, the "OK to Charge" (or OTC) signal. The OTC signal is at logic high if all of the following are satisfied:

1. Battery voltage is below 5 V
2. Charger voltage is greater than 2.6 V but below 12.8 V
3. $V_{CHARGER} > V_{BAT}$ + 40 mV when MAINCHARGEEN = Low
   $V_{CHARGER} > V_{BAT}$ - 40 mV when MAINCHARGEEN = High
4. ON/$\overline{\text{OFF}}$ pin is at logic high.

In order to charge the battery in any manner, the OTC signal has to be high.

Vishay Siliconix maintains worldwide manufacturing capability. Products may be manufactured at one of several qualified locations. Reliability data for Silicon Technology and Package Reliability represent a composite of all qualified locations. For related documents such as package/tape drawings, part marking, and reliability data, see www.vishay.com/ppg?71321.

TSSOP: 16-LEAD

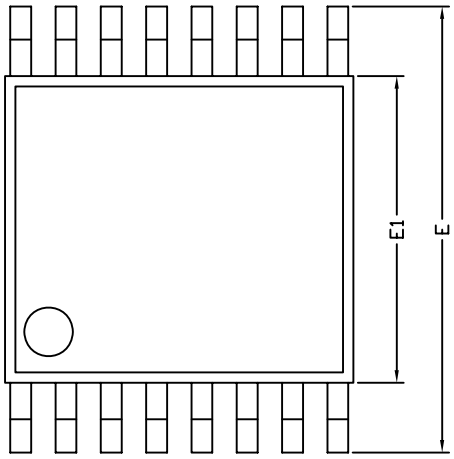

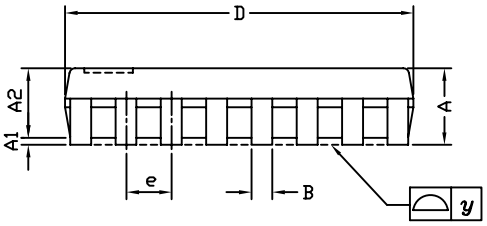

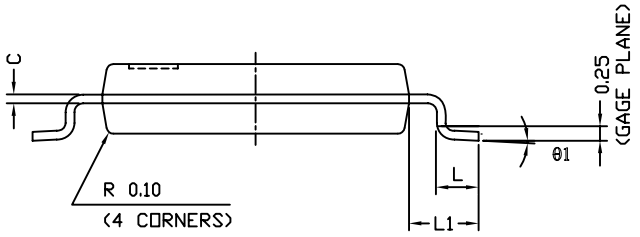

Symbols	DIMENSIONS IN MILLIMETERS		
	Min	Nom	Max
A	-	1.10	1.20
A1	0.05	0.10	0.15
A2	-	1.00	1.05
B	0.22	0.28	0.38
C	-	0.127	-
D	4.90	5.00	5.10
E	6.10	6.40	6.70
E1	4.30	4.40	4.50
e	-	0.65	-
L	0.50	0.60	0.70
L1	0.90	1.00	1.10
y	-	-	0.10
θ1	0°	3°	6°
ECN: S-61920-Rev. D, 23-Oct-06 DWG: 5624			

RECOMMENDED MINIMUM PAD FOR TSSOP-16

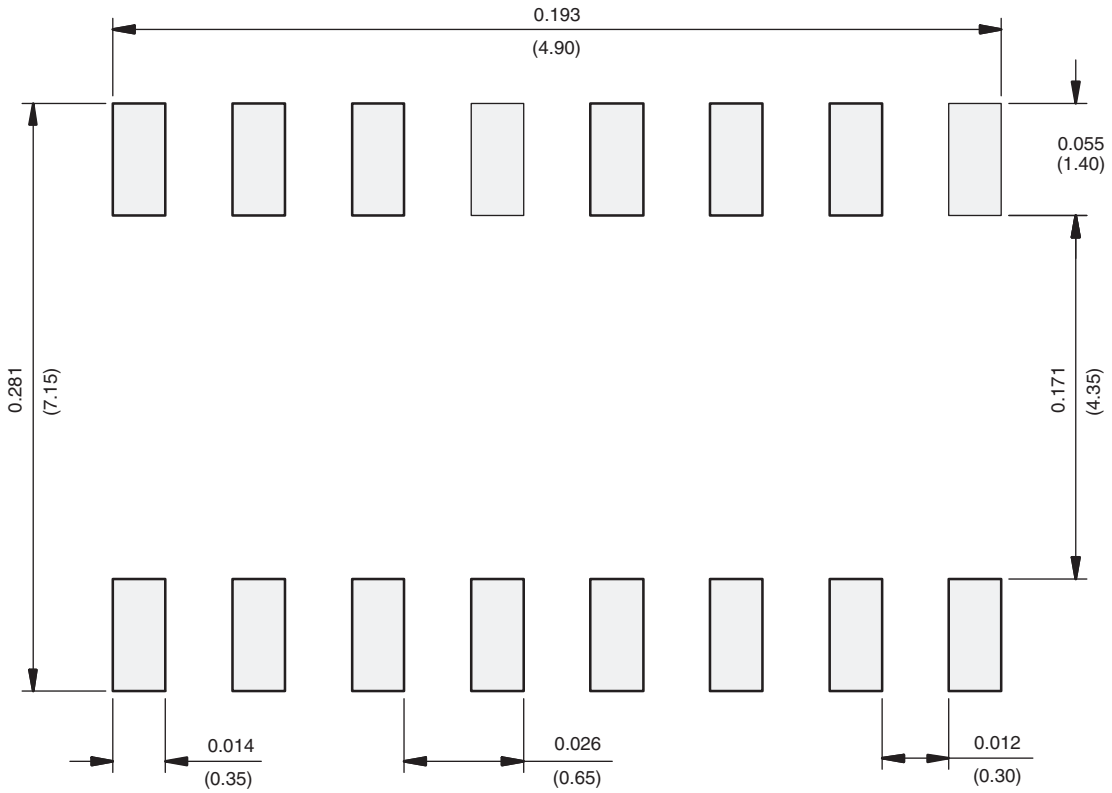

Recommended Minimum Pads
Dimensions in inches (mm)

THIS DOCUMENT IS SUBJECT TO CHANGE WITHOUT NOTICE. THE PRODUCTS DESCRIBED HEREIN AND THIS DOCUMENT ARE SUBJECT TO SPECIFIC DISCLAIMERS, SET FORTH AT www.vishay.com/doc?91000

Disclaimer

ALL PRODUCT, PRODUCT SPECIFICATIONS AND DATA ARE SUBJECT TO CHANGE WITHOUT NOTICE TO IMPROVE RELIABILITY, FUNCTION OR DESIGN OR OTHERWISE.

Vishay Intertechnology, Inc., its affiliates, agents, and employees, and all persons acting on its or their behalf (collectively, “Vishay”), disclaim any and all liability for any errors, inaccuracies or incompleteness contained in any datasheet or in any other disclosure relating to any product.

Vishay makes no warranty, representation or guarantee regarding the suitability of the products for any particular purpose or the continuing production of any product. To the maximum extent permitted by applicable law, Vishay disclaims (i) any and all liability arising out of the application or use of any product, (ii) any and all liability, including without limitation special, consequential or incidental damages, and (iii) any and all implied warranties, including warranties of fitness for particular purpose, non-infringement and merchantability.

Statements regarding the suitability of products for certain types of applications are based on Vishay's knowledge of typical requirements that are often placed on Vishay products in generic applications. Such statements are not binding statements about the suitability of products for a particular application. It is the customer's responsibility to validate that a particular product with the properties described in the product specification is suitable for use in a particular application. Parameters provided in datasheets and / or specifications may vary in different applications and performance may vary over time. All operating parameters, including typical parameters, must be validated for each customer application by the customer's technical experts. Product specifications do not expand or otherwise modify Vishay's terms and conditions of purchase, including but not limited to the warranty expressed therein.

Hyperlinks included in this datasheet may direct users to third-party websites. These links are provided as a convenience and for informational purposes only. Inclusion of these hyperlinks does not constitute an endorsement or an approval by Vishay of any of the products, services or opinions of the corporation, organization or individual associated with the third-party website. Vishay disclaims any and all liability and bears no responsibility for the accuracy, legality or content of the third-party website or for that of subsequent links.

Vishay products are not designed for use in life-saving or life-sustaining applications or any application in which the failure of the Vishay product could result in personal injury or death unless specifically qualified in writing by Vishay. Customers using or selling Vishay products not expressly indicated for use in such applications do so at their own risk. Please contact authorized Vishay personnel to obtain written terms and conditions regarding products designed for such applications.

No license, express or implied, by estoppel or otherwise, to any intellectual property rights is granted by this document or by any conduct of Vishay. Product names and markings noted herein may be trademarks of their respective owners.

© 2025 VISHAY INTERTECHNOLOGY, INC. ALL RIGHTS RESERVED

THIS DOCUMENT IS SUBJECT TO CHANGE WITHOUT NOTICE. THE PRODUCTS DESCRIBED HEREIN AND THIS DOCUMENT ARE SUBJECT TO SPECIFIC DISCLAIMERS, SET FORTH AT www.vishay.com/doc?91000