EO-CF/UT - Socket

0804024

https://www.phoenixcontact.com/pc/products/0804024

Please be informed that the data shown in this PDF document is generated from our online catalog. Please find the complete data in the user documentation. Our general terms of use for downloads are valid.



Socket, Pin connector pattern type CF, Screw connection, gray, for mounting on a DIN rail in the service interface or direct mounting, 250 V AC, 16 A, -20 °C, 60 °C, VDE 0620-1

Commercial data

Item number	0804024
Packing unit	5 pc
Minimum order quantity	5 pc
Product key	BE7611
Catalog page	Page 562 (C-3-2019)
GTIN	4055626225661
Weight per piece (including packing)	75.52 g
Weight per piece (excluding packing)	73 g
Customs tariff number	85366990
Country of origin	PL

Technical data

Product properties

Product type	Socket
Country ID	Germany

Electrical properties

Nominal voltage U_N	250 V AC (50 Hz)
Nominal current I_N	16 A

Connection data

Connection method	Screw connection
Stripping length	8 mm
Tightening torque	0.5 ... 0.6 Nm
Conductor cross section flexible	0.2 mm² ... 2.5 mm²
Conductor cross section rigid	0.2 mm² ... 4 mm²
Cross section AWG	24 ... 12
Screw thread	M3

Signaling

Status display	No

Dimensions

Dimensional drawing	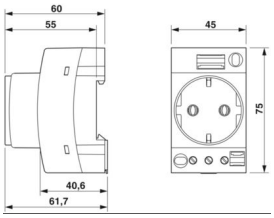
Width	45 mm
Height	75 mm
Depth	75 mm

Material specifications

Color	gray
Flammability rating according to UL 94	V0
Insulating material	PA
Contact material	CuZn37
Static insulating material application in cold	-60 °C
Relative insulation material temperature index (Elec., UL 746 B)	130 °C
Fire protection for rail vehicles (DIN EN 45545-2) R22	HL 1 - HL 3
Fire protection for rail vehicles (DIN EN 45545-2) R23	HL 1 - HL 3
Fire protection for rail vehicles (DIN EN 45545-2) R24	HL 1 - HL 3

Fire protection for rail vehicles (DIN EN 45545-2) R26	HL 1 - HL 3
Surface flammability NFPA 130 (ASTM E 162)	passed
Specific optical density of smoke NFPA 130 (ASTM E 662)	passed
Smoke gas toxicity NFPA 130 (SMP 800C)	passed

Connector

Type of plug	Pin connector pattern type CF

Environmental and real-life conditions

Ambient conditions

Degree of protection	IP20
Ambient temperature (operation)	-20 °C ... 60 °C (max. short-term operating temperature RTI Elec.)
Ambient temperature (storage/transport)	-25 °C ... 60 °C (for a short time, not exceeding 24 h, -60 °C to +70 °C)
Permissible humidity (storage/transport)	30 % ... 70 %

Standards and regulations

Standards

Standards/regulations	VDE 0620-1

Mounting

Mounting type	for mounting on a DIN rail in the service interface or direct mounting

Drawings

Circuit diagram

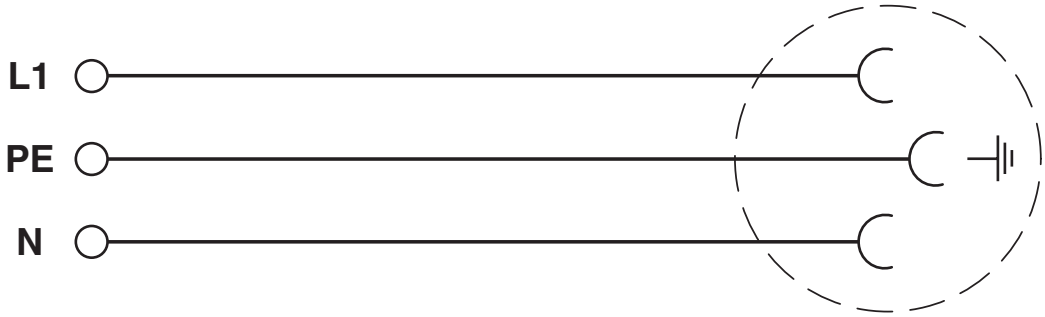

Dimensional drawing

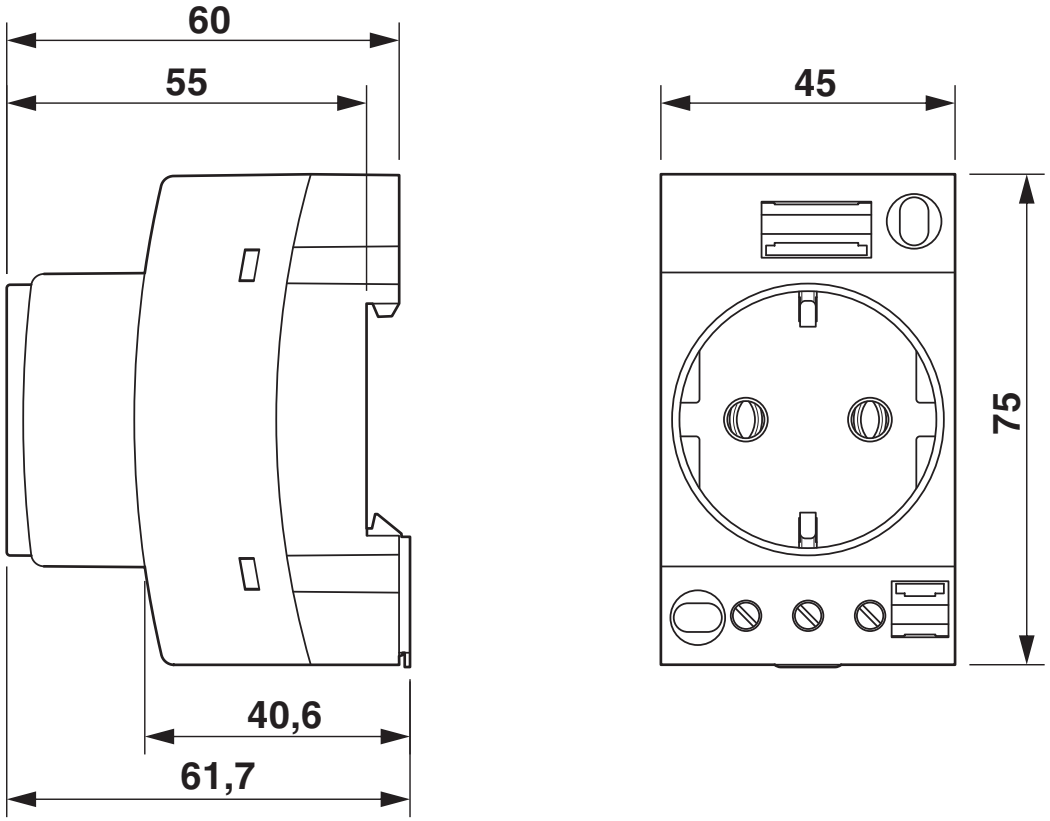

Approvals

To download certificates, visit the product detail page: https://www.phoenixcontact.com/pc/products/0804024

EAC
Approval ID: RU C-DE.BL08.B.00511

VDE Zeichengenehmigung
Approval ID: 40047711

	Nominal voltage U_N	Nominal current I_N	Cross section AWG	Cross section mm^2
	250 V	16 A	-	-

EAC-RoHS
Approval ID: RU D-DE.HB49.B.00025

Classifications

ECLASS

ECLASS-11.0	27142305
ECLASS-12.0	27142305
ECLASS-13.0	27142305

ETIM

ETIM 9.0	EC001663

UNSPSC

UNSPSC 21.0	39121400

Environmental product compliance

EU RoHS

Fulfills EU RoHS substance requirements	Yes, No exemptions

China RoHS

Environment friendly use period (EFUP)	EFUP-E
	No hazardous substances above the limits

EU REACH SVHC

REACH candidate substance (CAS No.)	No substance above 0.1 wt%

Phoenix Contact 2024 © - all rights reserved
https://www.phoenixcontact.com

PHOENIX CONTACT GmbH & Co. KG
Flachsmarktstraße 8
D-32825 Blomberg
+49 (0) 5235-3 00
info@phoenixcontact.com