SMD Common Mode Filter – BPPM Series



A full series of common mode choke is designed for excellent noise attenuation with compact sizing for use in wide range of applications. Both standard series and custom designs are available.

Features

- RoHS Compliant
- Miniature SMD type common mode filter for fully automated assembly
- Wide impedance range (70Ω ~ 3000Ω) for EMI suppression
- Excellent solderability

Applications

- USB line for personal computers and peripheral
- IEEE 1394 line for personal computers, DVC, STB
- LVDS, panel line for liquid display panels, graph card,etc.

Product Identification

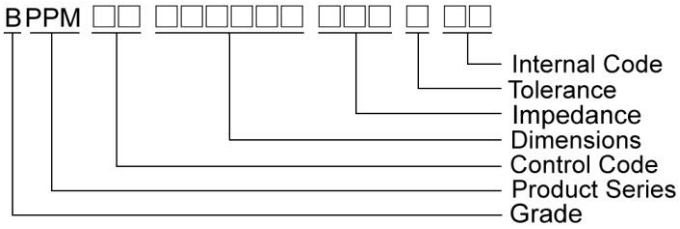

Shape and Dimensions

Recommended Pattern

BPPM00050520/ 070638/ 090748/ 121164/ 151360

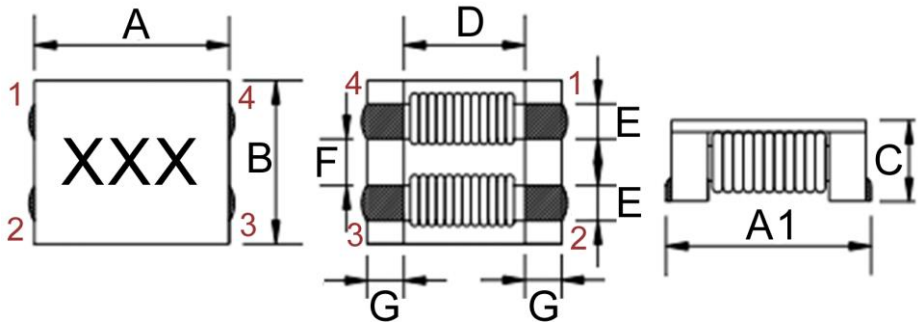

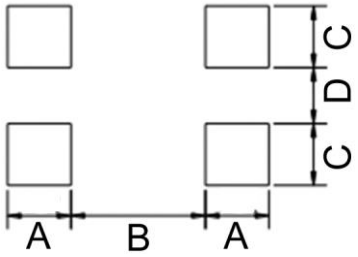

Dimensions in mm

TYPE	Shape and Dimensions								Recommended Pattern			
	A	A1	B	C	D	E	F	G	A	B	C	D
BPPM00050520	4.7±0.5	-	4.5±0.5	2.0 Max	2.7	0.75	1.25	1.0	1.45	2.2	1.2	1.05
BPPM00070638	7.0±0.5	7.5±0.5	6.0±0.5	3.8 Max	3.5	1.5±0.2	1.5±0.2	1.75±0.2	2.9	3.2	1.9	1.3
BPPM00090748	9.0±0.5	9.5±0.5	7.0±0.5	4.8 Max	5.6	1.5±0.2	2.0±0.2	1.7±0.2	3.0	5.0	1.75	1.5
BPPM00121164	12±0.5	12.5±0.5	10.8±0.5	6.4 Max	7.0	2.7±0.2	2.5±0.2	2.5±0.2	3.6	6.6	3.6	2.1
BPPM00151360	15±0.5	15.5±0.5	13±0.4	6.0 Max	9.0	3.4Typ.	2.8Typ.	3.0Typ.	3.5	8.7	3.0	3.2

Shape and Dimensions

Recommended Pattern

BPPM00485023

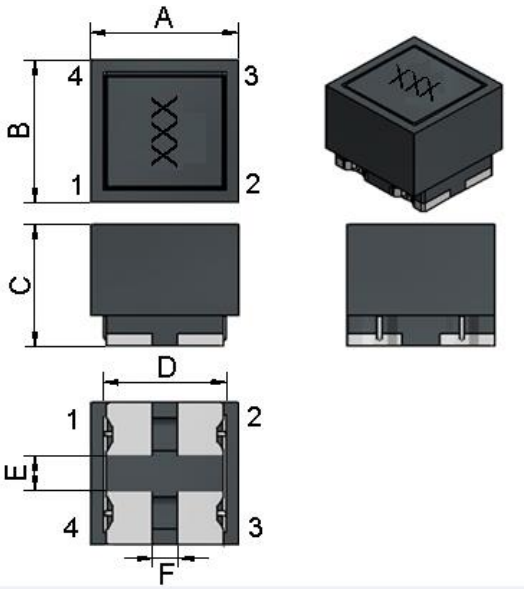

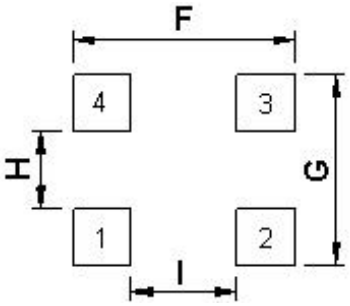

Dimensions in mm

TYPE	Shape and Dimensions						Recommended Pattern			
	A	B	C	D	E	F	F	G	H	I
BPPM00485023	4.8±0.3	5.0±0.3	2.3±0.2	3.5±0.2	2.2±0.2	1.1±0.2	4.4	5.5	2.0	0.9

Electrical Characteristics

Part Number	Impedance(Ω)		Test Frequency (MHz)	RDC (mΩ)Max	Rated Current (A)Max	Insulation Resistance (MΩ)Min	Rated Voltage (V)Max	Marking
	Min	Typ						
BPPM00050520301X0E	100	300	100	45	3.0	10	50	301
BPPM00050520401X0E	200	400	100	50	2.5	10	50	401
BPPM00050520701X0E	500	700	100	59	2.2	10	50	701
BPPM00050520102X0E	800	1000	100	68	2.1	10	50	102
BPPM00050520122X0E	1000	1200	100	74	2.0	10	50	122
BPPM00050520142X0E	1200	1400	100	81	1.9	10	50	142

Note: When ordering, please specify tolerance code.

- Operating temperature range－40℃～125℃(Including self - temperature rise)
- Rated Current：Based on temperature rise (△T:40℃ Typ.)
- Measure Equipment：

  Z：HP 4291B IMPEDANCE ANALYZER (or equivalent)

  RDC：CHROMA MODEL 16502 MILLIOHMMETER (or equivalent)

  Insulation Resistance：CHROMA MODEL 19073 AC/DC/IR HIPOT TESTER (or equivalent)

Please be sure to request approval specifications that provide further details of the products. Kindly note that the content of these specifications are subject to change or may be discontinued without prior notice. This product may not be designed/used in medical or high risk applications without Chilisin approval. Please contact our sales department before ordering.

Pulse a YAGEO company

CHILISIN ELECTRONICS CORP.

Electrical Characteristics

Part Number	Impedance(Ω)		Test Frequency (MHz)	RDC (mΩ)Max	Rated Current (A)Max	Insulation Resistance (MΩ)Min	Rated Voltage (V)Max	Marking
	Min	Typ						
BPPM00070638400X00	40	70	100	5	15	10	125	400
BPPM00070638101X00	100	140	100	10	9	10	125	101
BPPM00070638301X00	225	300	100	10	5	10	125	301
BPPM00070638501X00	275	350	100	10	5	10	125	501
BPPM00070638701X00	500	700	100	15	4	10	125	701
BPPM00070638102X00	800	1020	100	17	3	10	125	102
BPPM00070638132X00	910	1300	100	21	2.5	10	125	132
BPPM00070638272X00	2000	2700	100	63	1	10	125	272
BPPM00070638302X00	2500	3000	100	75	0.9	10	125	302

Note: When ordering, please specify tolerance code.

- Operating temperature range－40℃～125℃(Including self - temperature rise)
- Rated Current：Based on temperature rise (△T:40℃ Typ.)
- Measure Equipment：

  Z：HP 4291B IMPEDANCE ANALYZER (or equivalent)

  RDC：CHROMA MODEL 16502 MILLIOHMMETER (or equivalent)

  Insulation Resistance：CHROMA MODEL 19073 AC/DC/IR HIPOT TESTER (or equivalent)

Please be sure to request approval specifications that provide further details of the products. Kindly note that the content of these specifications are subject to change or may be discontinued without prior notice. This product may not be designed/used in medical or high risk applications without Chilisin approval. Please contact our sales department before ordering.

Pulse a YAGEO company

CHILISIN ELECTRONICS CORP.

Electrical Characteristics

Part Number	Impedance(Ω)		Test Frequency (MHz)	RDC (mΩ)Max	Rated Current (A)Max	Insulation Resistance (MΩ)Min	Rated Voltage (V)Max	Marking
	Min	Typ						
BPPM00090748301X00	225	300	100	6	6	10	80	301
BPPM00090748501X00	450	600	100	8	5.5	10	80	501
BPPM00090748701X00	500	700	100	10	5	10	80	701
BPPM00090748102X00	750	1000	100	13	4	10	80	102
BPPM00090748152X00	1100	1500	100	18	3.5	10	80	152
BPPM00090748222X00	1700	2200	100	60	2.5	10	80	222
BPPM00090748272X00	2000	2700	100	86	2	10	80	272

Note: When ordering, please specify tolerance code.

- Operating temperature range－40℃～125℃(Including self - temperature rise)
- Rated Current：Based on temperature rise (△T:40℃ Typ.)
- Measure Equipment：

  Z：HP 4291B IMPEDANCE ANALYZER (or equivalent)

  RDC：CHROMA MODEL 16502 MILLIOHMMETER (or equivalent)

  Insulation Resistance：CHROMA MODEL 19073 AC/DC/IR HIPOT TESTER (or equivalent)

Please be sure to request approval specifications that provide further details of the products. Kindly note that the content of these specifications are subject to change or may be discontinued without prior notice. This product may not be designed/used in medical or high risk applications without Chilisin approval. Please contact our sales department before ordering.

Pulse a YAGEO company

CHILISIN ELECTRONICS CORP.

Electrical Characteristics

Part Number	Impedance(Ω)		Test Frequency (MHz)	RDC (mΩ)Max	Rated Current (A)Max	Insulation Resistance (MΩ)Min	Rated Voltage (V)Max	Marking
	Min	Typ						
BPPM00121164800X00	80	230	100	2.2Typ	10	10	80	800
BPPM00121164701X00	500	700	100	6	8	10	80	701
BPPM00121164801X00	600	800	100	8	8	10	80	801
BPPM00121164102X00	750	1000	100	14	6	10	80	102
BPPM00121164222X00	2200	2500	10	35	1.8	10	80	222
BPPM00121164272X00	2300	2700	10	50	1.5	10	80	272

Note: When ordering, please specify tolerance code.

- Operating temperature range－40℃～125℃(Including self - temperature rise)
- Rated Current：Based on temperature rise (△T:40℃ Typ.)
- Measure Equipment：

  Z：HP 4291B IMPEDANCE ANALYZER (or equivalent)

  RDC：CHROMA MODEL 16502 MILLIOHMMETER (or equivalent)

  Insulation Resistance：CHROMA MODEL 19073 AC/DC/IR HIPOT TESTER (or equivalent)

Please be sure to request approval specifications that provide further details of the products. Kindly note that the content of these specifications are subject to change or may be discontinued without prior notice. This product may not be designed/used in medical or high risk applications without Chilisin approval. Please contact our sales department before ordering.

Pulse a YAGEO company

CHILISIN ELECTRONICS CORP.

Electrical Characteristics

Part Number	Impedance (Ω)		Test Frequency (MHz)	RDC (mΩ)Max	Rated Current (A)Max	Insulation Resistance (MΩ)Min	Rated Voltage (V)Max	Marking
	Min	Typ						
BPPM00151360301X00	250	300	100	4.7	13	10	80	301
BPPM00151360551X00	450	550	100	3.8±20%	10	10	80	551
BPPM00151360701X00	500	700	100	7	10	10	80	701
BPPM00151360152X00	1100	1500	100	9	8.5	10	80	152

Note: When ordering, please specify tolerance code.

- Operating temperature range－40℃～125℃(Including self - temperature rise)
- Rated Current：Based on temperature rise (△T:40℃ Typ.)
- Measure Equipment：

  Z：HP 4291B IMPEDANCE ANALYZER (or equivalent)

  RDC：CHROMA MODEL 16502 MILLIOHMMETER (or equivalent)

  Insulation Resistance：CHROMA MODEL 19073 AC/DC/IR HIPOT TESTER (or equivalent)

Please be sure to request approval specifications that provide further details of the products. Kindly note that the content of these specifications are subject to change or may be discontinued without prior notice. This product may not be designed/used in medical or high risk applications without Chilisin approval. Please contact our sales department before ordering.

Pulse a YAGEO company

CHILISIN ELECTRONICS CORP.

Electrical Characteristics

Part Number	Impedance(Ω) Typ. @10MHz	Impedance(Ω) Typ. @100MHz	RDC (mΩ) ±40%	Irms (A)Max.	Rated Voltage (V)Max.	Withstanding voltage (V)Max.	Insulation Resistance (MΩ)Min.	Marking
BPPM00485023101X00	-	100	10	6	50	125	10	101
BPPM00485023251X00	20	250	14	5	50	125	10	251
BPPM00485023501X00	30	500	19	4	50	125	10	501
BPPM00485023102X00	60	1000	24	3	50	125	10	102
BPPM00485023142X00	100	1400	40	2	50	125	10	142
BPPM00485023152X00	100	1500	40	2	50	125	10	152

Note: When ordering, please specify tolerance code.

- Operating temperature range －４０℃ ~ １２５℃(Including self - temperature rise)
- Irms:Based on temperature rise (△T:40℃ TYP)
- Measure Equipment：

  Z：HP 4291B IMPEDANCE ANALYZER (or equivalent)

  RDC：CHROMA MODEL 16502 MILLIOHMMETER (or equivalent)

  Insulation Resistance：CHROMA MODEL 19073 AC/DC/IR HIPOT TESTER (or equivalent)

Please be sure to request approval specifications that provide further details of the products. Kindly note that the content of these specifications are subject to change or may be discontinued without prior notice. This product may not be designed/used in medical or high risk applications without Chilisin approval. Please contact our sales department before ordering.

Packaging Specifications

Tape Dimensions

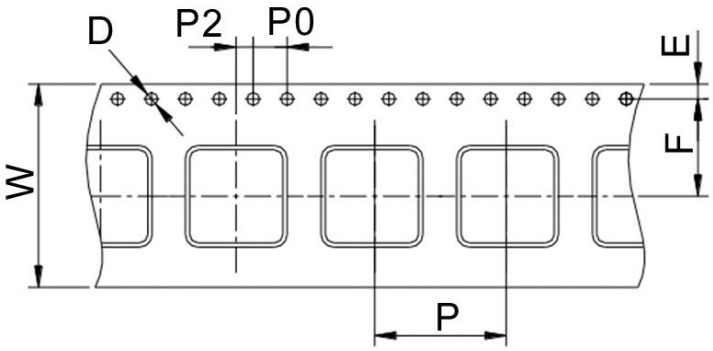

Reel Dimensions

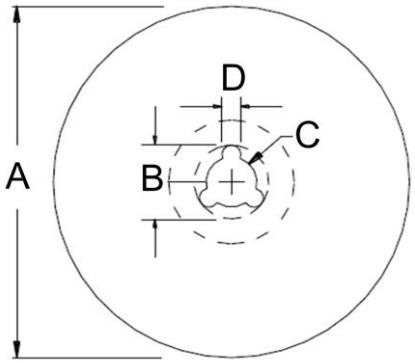

Dimensions in mm

TYPE	Tape Dimensions							Reel Dimensions				Quantity
	W	D	E	F	P	P0	P2	A	B	C	D	PCS / Reel
BPPM00050520	12	1.5	1.75	5.5	8	4	2	178	20	13	2	1000
BPPM00070638	16	1.5	1.75	7.5	12	4	2	330	20	13	2	1500
BPPM00090748	24	1.5	1.75	11.5	16	4	2.02	330	20	13	2	700
BPPM00121164	24	1.5	1.75	11.5	16	4	2	330	20	13	2	500
BPPM00151360	24	1.5	1.75	11.5	20	4	2	330	20	13	2	450
BPPM00485023	12	1.5	1.75	5.5	8	4	2	330	21.5	13	2	2500