TFKC 2,5 HC/ 6-ST-5,08 - PCB connector

1969153

https://www.phoenixcontact.com/us/products/1969153

Please be informed that the data shown in this PDF document is generated from our online catalog. Please find the complete data in the user documentation. Our general terms of use for downloads are valid.

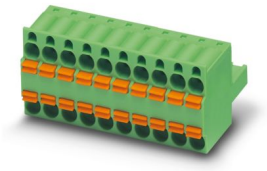

PCB connector, nominal cross section: 2.5 mm^2, color: green, nominal current: 16 A, rated voltage (III/2): 320 V, contact surface: Tin, contact connection type: Socket, number of potentials: 6, number of rows: 1, number of positions: 6, number of connections: 12, product range: TFKC 2,5HC/..-ST, pitch: 5.08 mm, connection method: Push-in spring connection, conductor/PCB connection direction: 0 °, locking clip: - without locking clip, plug-in system: COMBICON MSTB 2,5 HC, locking: without, mounting: without, type of packaging: packed in cardboard

Your advantages

- Time saving push-in connection, tools not required
- Defined contact force ensures that contact remains stable over the long term
- Intuitive operation due to color-coded actuating push button
- Integrated double steel spring provides additional safety in the event of temperature and power fluctuations
- Potentials can be easily looped through – ideal for BUS applications

Commercial data

Item number	1969153
Packing unit	50 pc
Minimum order quantity	50 pc
Sales key	AA03
Product key	AACFMC
GTIN	4017918936341
Weight per piece (including packing)	14.246 g
Weight per piece (excluding packing)	12.764 g
Customs tariff number	85366990
Country of origin	BG

Technical data

Product properties

Product type	PCB connector
Product family	TFKC 2,5HC/..-ST
Product line	COMBICON Connectors M
Type	Plug component
Number of positions	6
Pitch	5.08 mm
Number of connections	12
Number of rows	1
Number of potentials	6
Mounting flange	without

Electrical properties

Nominal current I_N	16 A
Nominal voltage U_N	320 V
Degree of pollution	3
Rated voltage (III/3)	320 V
Rated surge voltage (III/3)	4 kV
Rated voltage (III/2)	320 V
Rated surge voltage (III/2)	4 kV
Rated voltage (II/2)	630 V
Rated surge voltage (II/2)	4 kV

Connection data

Connection technology

Type	Plug component
Connector system	COMBICON MSTB 2,5 HC
Nominal cross section	2.5 mm²
Contact connection type	Socket

Interlock

Locking type	without
Mounting flange	without

Conductor connection

Connection method	Push-in spring connection
Conductor/PCB connection direction	0 °
Conductor cross section rigid	0.2 mm² ... 2.5 mm²
Conductor cross section flexible	0.2 mm² ... 2.5 mm²
Conductor cross section AWG	24 ... 12
Conductor cross section flexible, with ferrule without plastic sleeve	0.25 mm² ... 2.5 mm²

Conductor cross section, flexible, with ferrule, with plastic sleeve	0.25 mm² ... 2.5 mm²
2 conductors with the same cross section, flexible, with TWIN ferrule with plastic sleeve	0.5 mm² ... 1.5 mm²
Cylindrical gauge a x b / diameter	2.8 mm x 2.0 mm / 2.0 mm
Stripping length	10 mm

Specifications for ferrules without insulating collar

recommended crimping tool	1212034 CRIMPFOX 6

Specifications for ferrules with insulating collar

recommended crimping tool	1212034 CRIMPFOX 6

Material specifications

Material data - contact

Note	WEEE/RoHS-compliant, free of whiskers according to IEC 60068-2-82/JEDEC JESD 201
Contact material	Cu alloy
Surface characteristics	hot-dip tin-plated
Metal surface terminal point (top layer)	Tin (4 - 8 µm Sn)
Metal surface contact area (top layer)	Tin (4 - 8 µm Sn)

Material data - housing

Color (Housing)	green (6021)
Insulating material	PA
Insulating material group	I
CTI according to IEC 60112	600
Flammability rating according to UL 94	V0
Glow wire flammability index GWFI according to EN 60695-2-12	850
Glow wire ignition temperature GWIT according to EN 60695-2-13	775
Temperature for the ball pressure test according to EN 60695-10-2	125 °C

Material data – actuating element

Color (Actuating element)	orange (2003)
Insulating material	PBT
Insulating material group	IIIa
CTI according to IEC 60112	275
Flammability rating according to UL 94	V0

Dimensions

Dimensional drawing	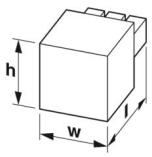

Pitch	5.08 mm
Width [w]	30.38 mm
Height [h]	22.1 mm
Length [l]	25.7 mm

Notes

Notes on operation	In accordance with IEC 61984, COMBICON connectors have no switching power (COC). During designated use, they must not be plugged in or disconnected when carrying voltage or under load.

Environmental and real-life conditions

Ambient conditions

Ambient temperature (operation)	-40 °C ... 100 °C (dependent on the derating curve)
Ambient temperature (storage/transport)	-40 °C ... 70 °C
Relative humidity (storage/transport)	30 % ... 70 %
Ambient temperature (assembly)	-5 °C ... 100 °C

Electrical tests

Air clearances and creepage distances |

Specification	IEC 60664-1:2007-04
Insulating material group	I
Comparative tracking index (IEC 60112)	CTI 600
Rated insulation voltage (III/3)	320 V
Rated surge voltage (III/3)	4 kV
minimum clearance value - non-homogenous field (III/3)	3 mm
minimum creepage distance (III/3)	4 mm
Rated insulation voltage (III/2)	320 V
Rated surge voltage (III/2)	4 kV
minimum clearance value - non-homogenous field (III/2)	3 mm
minimum creepage distance (III/2)	3 mm
Rated insulation voltage (II/2)	630 V
Rated surge voltage (II/2)	4 kV
minimum clearance value - non-homogenous field (II/2)	3 mm
minimum creepage distance (II/2)	3.2 mm

Packaging specifications

Type of packaging	packed in cardboard

Drawings

Dimensional drawing

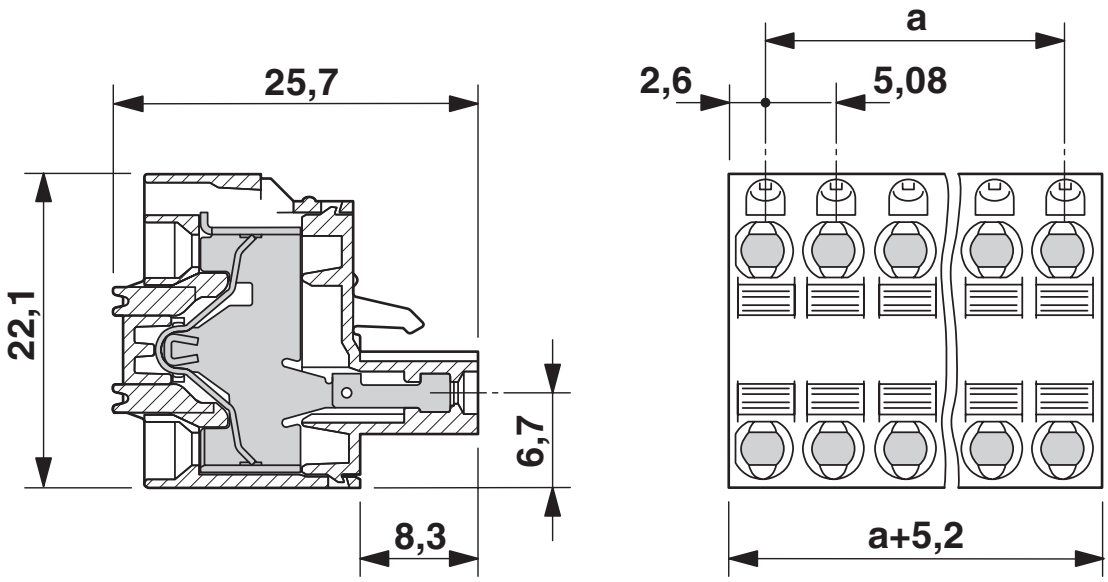

Approvals

To download certificates, visit the product detail page: https://www.phoenixcontact.com/us/products/1969153

cULus Recognized
Approval ID: E60425-19931011

	Nominal voltage U_N	Nominal current I_N	Cross section AWG	Cross section mm^2
Use group B				
Standard	300 V	16 A	26 - 12	-
Use group D				
Standard	300 V	10 A	26 - 12	-
Alternative 1	150 V	15 A	26 - 12	-

Classifications

ECLASS

ECLASS-11.0	27460202
ECLASS-12.0	27460202
ECLASS-13.0	27460202

ETIM

ETIM 9.0	EC002638

UNSPSC

UNSPSC 21.0	39121400

Environmental product compliance

EU RoHS

Fulfills EU RoHS substance requirements	Yes, No exemptions

China RoHS

Environment friendly use period (EFUP)	EFUP-E
	No hazardous substances above the limits

EU REACH SVHC

REACH candidate substance (CAS No.)	No substance above 0.1 wt%

Accessories

CP-MSTB - Coding profile

1734634

https://www.phoenixcontact.com/us/products/1734634

Coding profile, is inserted into the slot on the plug or inverted header, red insulating material



RPS - Reducing plug

0201647

https://www.phoenixcontact.com/us/products/0201647

Reducing plug, number of positions: 1, color: gray



SZS 0,6X3,5 - Screwdriver

1205053

https://www.phoenixcontact.com/us/products/1205053



Actuation tool, for ST terminal blocks, insulated, also suitable for use as a bladed screwdriver, size: 0.6 x 3.5 x 100 mm, 2-component grip, with non-slip grip

SK U/2,8 WH:UNBEDRUCKT - Marker card

0803883

https://www.phoenixcontact.com/us/products/0803883



Marker card, Din A4, white, unlabeled, can be labeled with: PLOTMARK, CMS-P1-PLOTTER, Office printing systems, mounting type: adhesive, for terminal block width: 210 mm, lettering field size: 186 x 2.8 mm, Number of individual labels: 3600

SK 5,08/2,8:FORTL.ZAHLEN - Marker card

0804280

https://www.phoenixcontact.com/us/products/0804280

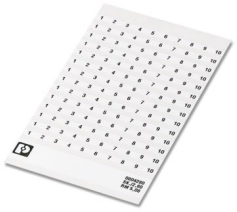

Marker card, white, labeled, horizontal: consecutive numbers 1 ... 10, 11 ... 20, etc. up to 91 ... (99)100, mounting type: adhesive, for terminal block width: 5.08 mm, lettering field size: 5.08 x 2.8 mm

MPS-IH WH - Insulating sleeve

0201663

https://www.phoenixcontact.com/us/products/0201663

Insulating sleeve, color: white



MPS-IH RD - Insulating sleeve

0201676

https://www.phoenixcontact.com/us/products/0201676

Insulating sleeve, color: red



MPS-IH BU - Insulating sleeve

0201689

https://www.phoenixcontact.com/us/products/0201689

Insulating sleeve, color: blue

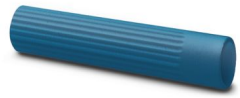

Phoenix Contact 2024 © - all rights reserved
https://www.phoenixcontact.com

Phoenix Contact USA
586 Fulling Mill Road
Middletown, PA 17057, United States
(+717) 944-1300
info@phoenixcon.com