# T530Y687M004AHE005

T530, Tantalum, Polymer Tantalum, Multi-Anode, 680 uF, 20%, 4 VDC, SMD, Polymer, Molded, Multiple Anodes, Low ESR, 5 mOhms, 7343, 4mm

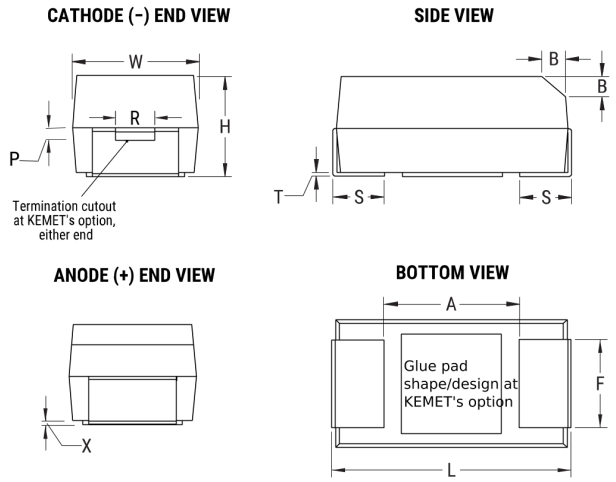


Click here for the 3D model.

## Dimensions

| | |
|---|---|
| Footprint | 7343 |
| L | 7.3mm +/-0.3mm |
| W | 4.3mm +/-0.3mm |
| H | 3.8mm +/-0.2mm |
| T | 0.13mm REF |
| S | 1.3mm +/-0.3mm |
| F | 2.4mm +/-0.1mm |
| A | 3.8mm MIN |
| B | 0.5mm +/-0.15mm |
| P | 1.7mm REF |
| R | 1mm REF |
| X | 0.1mm +/-0.1mm |

## Packaging Specifications

| | |
|---|---|
| Packaging | T&R, 178mm |
| Packaging Quantity | 500 |

## General Information

| | |
|---|---|
| Series | T530 |
| Dielectric | Polymer Tantalum |
| Style | SMD Chip |
| Description | SMD, Polymer, Molded, Multiple Anodes, Low ESR |
| Features | Low ESR |
| RoHS | No |
| Prop 65 | ⚠ **WARNING:** Cancer and reproductive harm - http://www.p65warnings.ca.gov. |
| SCIP Number | b064b03e-bd75-42af-b342-1fe94dec2340 |
| Termination | Tin Lead (SnPb) |
| AEC-Q200 | No |
| Typical Component Weight | 378.06 mg |
| Shelf Life | 52 Weeks |
| MSL | 3 |

## Specifications

| | |
|---|---|
| Capacitance | 680 uF |
| Capacitance Tolerance | 20% |
| Voltage DC | 4 VDC (105C), 2.68 VDC (125C) |
| Temperature Range | -55/+125°C |
| Rated Temperature | 105°C |
| Life | 2000 Hrs (125C) |
| Humidity | 60C, 90% RH, 1000 Hours, No Load |
| Dissipation Factor | 8% 120Hz 25C |
| Failure Rate | N/A |
| ESR | 5 mOhms (100kHz 25C) |
| Ripple Current | 7300 mA (rms, 100kHz 45C), 5110 mA (rms, 85C), 1825 mA (rms, 125C) |
| Leakage Current | 272 uA (5min 25°C) |

Statements of suitability for certain applications are based on our knowledge of typical operating conditions for such applications, but are not intended to constitute - and we specifically disclaim - any warranty concerning suitability for a specific customer application or use. This Information is intended for use only by customers who have the requisite experience and capability to determine the correct products for their application. Any technical advice inferred from this Information or otherwise provided by us with reference to the use of our products is given gratis, and we assume no obligation or liability for the advice given or results obtained.



© 2006 - 2024 KEMET

# T530Y687M004AHE005

T530, Tantalum, Polymer Tantalum, Multi-Anode, 680 uF, 20%, 4 VDC, SMD, Polymer, Molded, Multiple Anodes, Low ESR, 5 mOhms, 7343, 4mm

## Simulations

For the complete simulation environment please visit K-SIM.

### Impedance and ESR

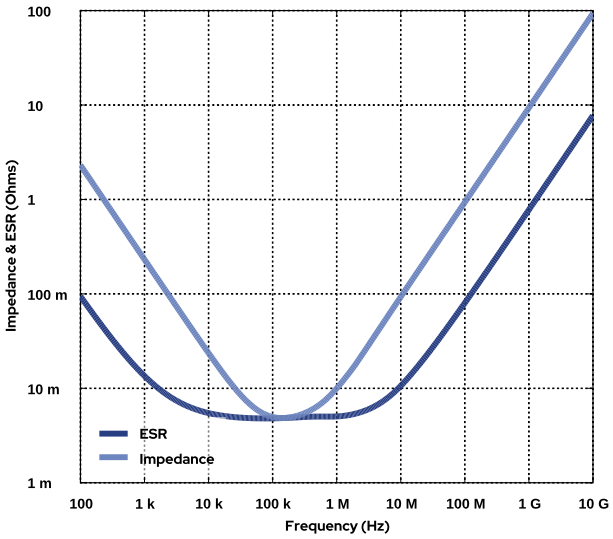


### Capacitance and Inductance

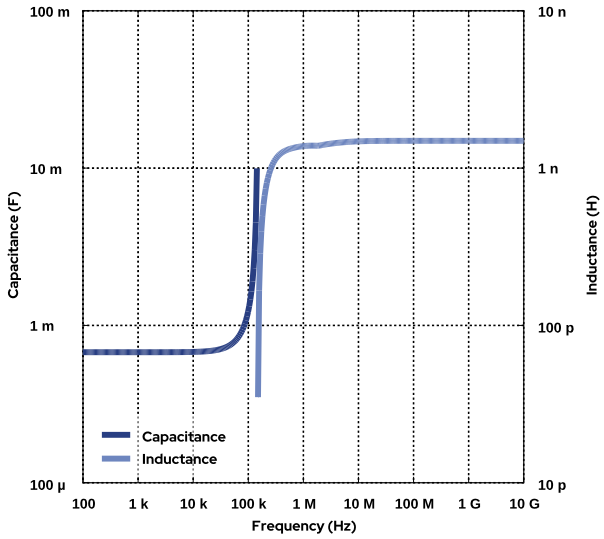


### Current and Voltage

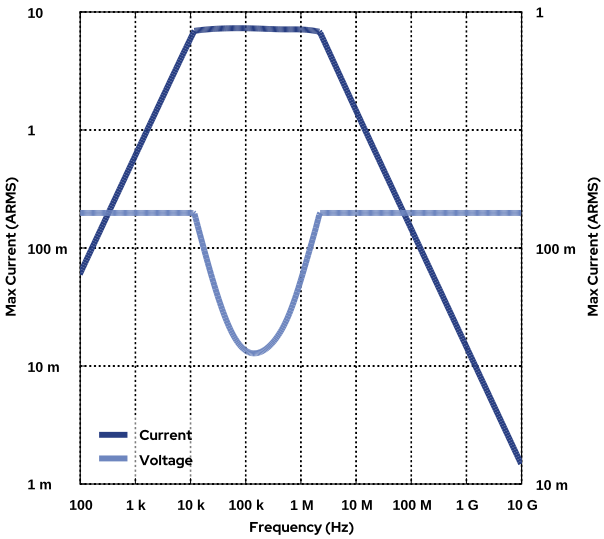


### S11

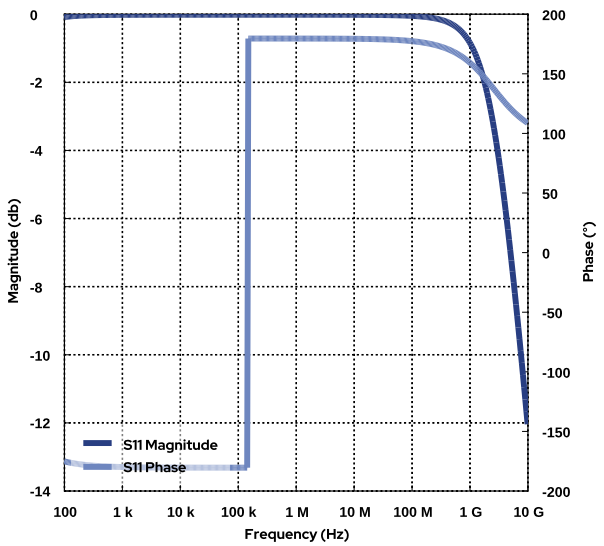




© 2006 - 2024 KEMET

# T530Y687M004AHE005

T530, Tantalum, Polymer Tantalum, Multi-Anode, 680 uF, 20%, 4 VDC, SMD, Polymer, Molded, Multiple Anodes, Low ESR, 5 mOhms, 7343, 4mm

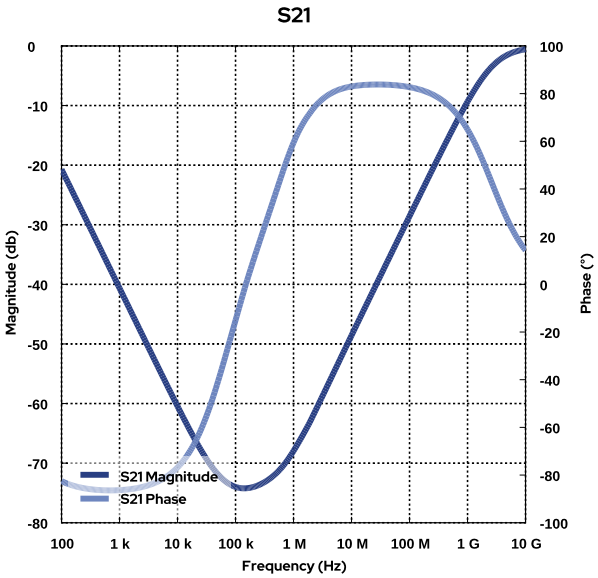




© 2006 - 2024 KEMET

# T530Y687M004AHE005

T530, Tantalum, Polymer Tantalum, Multi-Anode, 680 uF, 20%, 4 VDC, SMD, Polymer, Molded, Multiple Anodes, Low ESR, 5 mOhms, 7343, 4mm

**These are simulations.**

This is not a specification!

The responses shown represent the typical response for each part type. Specific responses may vary, depending on manufacturing variation affects of all parameters involved, including the specified tolerances applied to capacitance and unspecified variations of ESR, ESL, and leakage resistance.

The responses shown do not represent a specified or implied maximum capability of the device for all applications.

- The ESR used for ripple "Ripple Current/Voltage vs. Frequency" plots is the ESR at ambient temperature.
- The ESR in the "Temperature Rise vs. Ripple Current" plots is adjusted to each incremental temperature rise before the power and ripple current is calculated.
- The effects shown herein are based on measured data from a multiple part sample of the parts in question.
- Ripple capability of this device will be factored by thermal resistance (Rth) created by circuit traces (addi affects of all parameters involved, including the specified tolerances applied to capacitance and unspecified variations of ESR, ESL, and leakage resistance.
- The peak voltages generated in the "Temperature Rise vs. Combined Ripple Currents" plot are calculated for each frequency and are not combined with voltages generated at any other harmonics.
- Please consult with the catalog or field applications engineer for maximum capability of the device in specific applications.

All product information and data (collectively, the "Information") are subject to change without notice.

KEMET K-SIM is designed to simulate behavior of components with respect to frequency, ambient temperature, and DC bias levels. The responses shown represent the typical response for each part type. Specific responses may vary, depending on manufacturing variation effects of all parameters involved, including the specified tolerances applied to capacitance and unspecified variations of ESR, ESL, and leakage resistance.

All Information given herein is believed to be accurate and reliable, but is presented without guarantee, warranty, or responsibility of any kind, expressed or implied. Statements of suitability for certain applications are based on our knowledge of typical operating conditions for such applications, but are not intended to constitute – and we specifically disclaim – any warranty concerning suitability for a specific customer application or use. This Information is intended for use only by customers who have the requisite experience and capability to determine the correct products for their application. Any technical advice inferred from this Information or otherwise provided by us with reference to the use of our products is given gratis, and we assume no obligation or liability for the advice given or results obtained.

If you have any questions please contact K-SIM.



© 2006 - 2024 KEMET