CERAMIC

Bandpass Filter

BFCQ-1892+

50Ω 17.7 to 20.2 GHz

THE BIG DEAL

- Standard Small 1008 (2.5x2.0 mm) Case Style
- Low Insertion Loss – Mid Band 1.4 dB Typical
- Wide Rejection Band
- Shielded Construction Preventing Filter From De-Tuning
- Reduced Footprint Area by Employing LGA (Land Grid Array)
- Surface Mountable Pick and Place Standard Case Style



Generic photo used for illustration purposes only

CASE STYLE: NL1008C-7

+RoHS Compliant
The +Suffix identifies RoHS Compliance.
See our website for methodologies and qualifications

APPLICATIONS

- Satellite Communications

PRODUCT OVERVIEW

The BFCQ-1892+ LTCC Bandpass Filter achieves a miniature size and high repeatability of performance by utilizing a proprietary LTCC material system and distributed filter topology. The typical passband loss at 17.7 to 20.2 GHz is as low as 1.4 dB, with typical stopband rejections at 45 dB up to 40 GHz. This model handles up to 1 W RF input power, and provides a wide operating temperature range from -55 to +125°C. Utilizing a proprietary LTCC material system and a distributed filter topology, this filter is able to achieve repeatable performance on a lot-to-lot basis.

KEY FEATURES

Feature	Advantages
Cost Effective	LTCC is scalable technology that is cost effective due to ease of production in high quantities.
Small Size (2.5x2.0 mm)	Allows for high layout density of circuit boards, while minimizing effects of parasitics.
Surface Mountable	Suitable for very high volume automated assembly process.

REV. A
ECO-015831
BFCQ-1892+
MCL NY
250721

CERAMIC

Bandpass Filter

BFCQ-1892+

50Ω 17.7 to 20.2 GHz

ELECTRICAL SPECIFICATIONS[1] AT +25°C

Parameter		F#	Frequency (GHz)	Min.	Typ.	Max.	Units
Passband	Center Frequency				18.95		GHz
	Insertion Loss	F1-F2	17.7-20.2		1.4	3.0	dB
	Return Loss	F1-F2	17.7-20.2		13		dB
Stopband, Lower	Insertion Loss	DC-F3	0.1-10	45	55		dB
			10-14.5	30	40		
Stopband, Upper	Insertion Loss	F4-F5	24-26	35	45		dB
			26-32	40	50		
			32-40	35	45		

1. Measured on Mini-Circuits Test Board TB-BFCQ-1892C+ with connectors and feedline de-embedded with 2xThru.

ABSOLUTE MAXIMUM RATINGS

Parameter	Ratings
Operating Temperature	-55°C to +125°C
Storage Temperature	-55°C to +125°C
RF Power Input	1 W

Permanent damage may occur if any of these limits are exceeded.

TYPICAL FREQUENCY RESPONSE

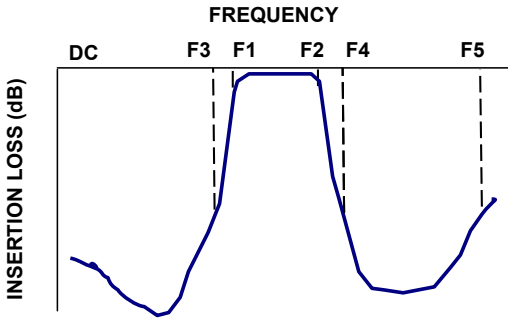

FUNCTIONAL SCHEMATIC

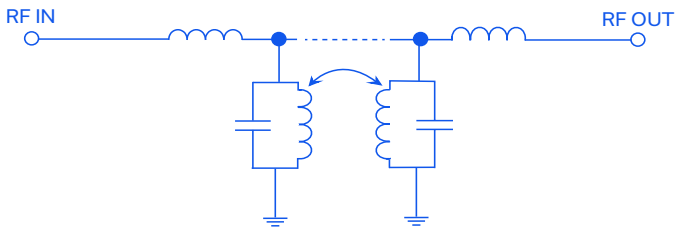

CERAMIC

Bandpass Filter

BFCQ-1892+

50Ω 17.7 to 20.2 GHz

PAD CONNECTIONS

INPUT	1
OUTPUT	2
GROUND	3

PRODUCT MARKING: UE

OUTLINE DRAWING

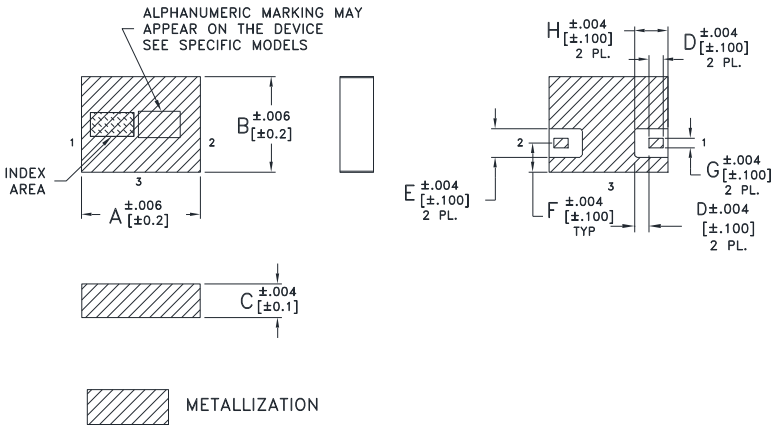

DEMO BOARD MCL P/N: TB-BFCQ-1892C+

SUGGESTED PCB LAYOUT (PL-707)

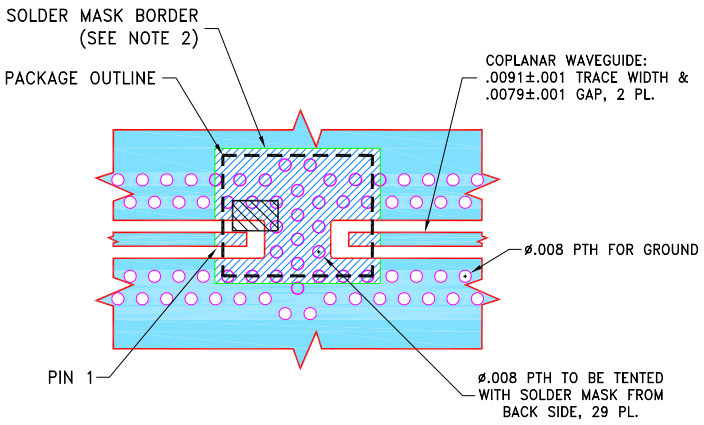

NOTES:
1. COPLANAR WAVEGUIDE PARAMETERS ARE SHOWN FOR MEGTRON-7 R5785(N); DIELECTRIC THICKNESS: .0049±.001; CLOTH STYLE: 2116; COPPER: HVLP/HVLP. FOR OTHER MATERIALS LINE WIDTH & GAP MAY NEED TO BE MODIFIED.
2. SOLDER MASK OPENING FOR COMPONENT SOLDERING HAS BEEN INCREASED AGAINST PCB LAND PATTERN RECOMMENDATIONS PER NL1008C-6 AND CAN BE DEVIATED FROM THIS DRAWING TO COMPLY WITH CUSTOMERS' DESIGN RULES.
3. BOTTOM SIDE OF THE PCB IS CONTINUOUS GROUND PLANE.

DENOTES PCB COPPER LAYOUT WITH SMOBC (SOLDER MASK OVER BARE COPPER).

DENOTES COPPER LAND PATTERN FREE OF SOLDER MASK.

OUTLINE DIMENSIONS (Inches / mm)

A	B	C	D	E	F	G	H	J	K	wt
.098	.079	.028	.012	.024	.024	.008	.028	.043	.024	grams
2.49	2.01	0.71	0.30	0.61	0.61	0.20	0.71	1.09	0.61	.019

CERAMIC

Bandpass Filter

BFCQ-1892+

50Ω 17.7 to 20.2 GHz

TYPICAL PERFORMANCE DATA AT +25°C

Frequency (MHz)	Insertion Loss (dB)	Return Loss (dB)
10	85.67	0.01
1000	80.83	0.04
2000	74.97	0.07
3000	71.27	0.13
4000	69.97	0.18
7000	70.56	0.09
8800	79.27	0.02
9200	71.94	0.04
10200	61.60	0.12
10700	57.97	0.18
14500	45.85	0.32
15100	36.58	0.40
17700	0.98	22.97
18950	0.95	18.99
20200	1.13	21.84
26000	63.35	0.51
30000	49.45	0.01
32000	54.28	0.21
36000	49.10	0.05
40000	43.60	2.06

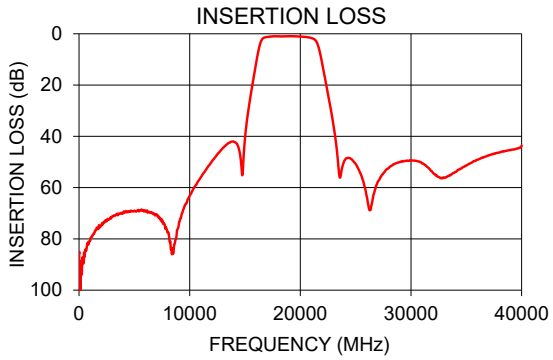

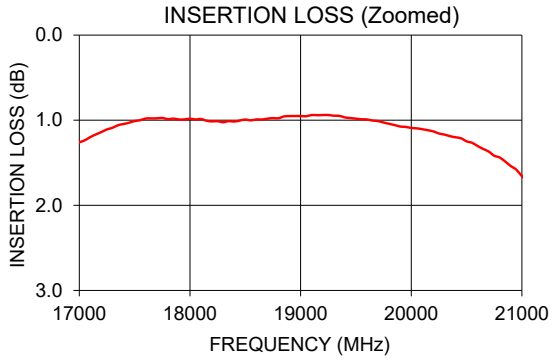

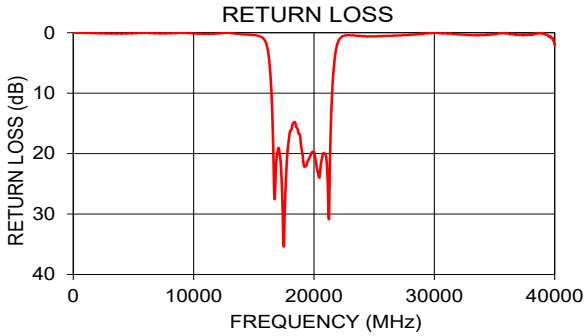

NOTES

A. Performance and quality attributes and conditions not expressly stated in this specification document are intended to be excluded and do not form a part of this specification document.

B. Electrical specifications and performance data contained in this specification document are based on Mini-Circuit's applicable established test performance criteria and measurement instructions.

C. The parts covered by this specification document are subject to Mini-Circuits standard limited warranty and terms and conditions (collectively, "Standard Terms"); Purchasers of this part are entitled to the rights and benefits contained therein. For a full statement of the standard. Terms and the exclusive rights and remedies thereunder, please visit Mini-Circuits' website at www.minicircuits.com/terms/viewterm.html